AD-A050 805 CONSEJO NACIONAL DE INVESTIGACIONES CIENTIFICAS Y TEC--ETC F/G 6/18
TRANSIENT EFFECTS OF LOW LEVEL MICROWAVE IRRADIATION ON BIOELEC--ETC(U)
JAN 78 A PORTELA, O LLOBERA, S M MICHAELSON N00014-68-C-0313

UNCLASSIFIED NL

| OF |
AD
A050 805

END
DATE
FILMED
4-78
DDC

Unclassified

SECURITY CLASSIFICATION OF THIS PAGE (When Data Entered)

REPORT DOCUMENTATION PAGE

READ INSTRUCTIONS BEFORE COMPLETING FORM

1. REPORT NUMBER	2. GOVT ACCESSION NO. / 3. RECIPIENT'S CATALOG NUMBER
4. TITLE (and Subtitle) Transient Effects of Low Level Microwave Irradiation on Biolectric Muscle Cells Properties, and on Water Permeability and Its Distribution	5. TYPE OF REPORT & PERIOD COVERED: Final
	6. PERFORMING ORG. REPORT NUMBER
7. AUTHOR(s): A. Portela, et al.	8. CONTRACT OR GRANT NUMBER(s): N00014-68-C-0313
9. PERFORMING ORGANIZATION NAME AND ADDRESS: Instituto de Investigaciones Biofisicas Consejo Nacional de Investigaciones Cientificas y Tecnicas Republica Argentina	10. PROGRAM ELEMENT, PROJECT, TASK AREA & WORK UNIT NUMBERS: NR 201-096
11. CONTROLLING OFFICE NAME AND ADDRESS: Office of Naval Research, 800 N. Quincy Street, Arlington, VA 22217	12. REPORT DATE: January 1978
	13. NUMBER OF PAGES: 64
14. MONITORING AGENCY NAME & ADDRESS (if different from Controlling Office)	15. SECURITY CLASS. (of this report): Unclassified
	15a. DECLASSIFICATION/DOWNGRADING SCHEDULE

16. DISTRIBUTION STATEMENT (of this Report)

Distribution Unlimited

17. DISTRIBUTION STATEMENT (of the abstract entered in Block 20, if different from Report)

18. SUPPLEMENTARY NOTES

19. KEY WORDS (Continue on reverse side if necessary and identify by block number)
Microwaves
Cells
Water Permeability
Membranes

20. ABSTRACT (Continue on reverse side if necessary and identify by block number)
Microwave radiation effects on passive and dynamic electrical properties and on cell water parameters were studied in muscle cells from muscles of the South American Frog Leptodactilus Ocellatus. Microwave exposure of 10 mW/cm^2 for a period of 120 minutes has produced transient changes on specific membrane resistance R_m, the membrane capacitance C_m and the space constant. Those electrical parameters related to the excitation and propagation of the action potential, i.e., the rate constant k_r and k_K, the maximum rate of rise V+ and fall V-of the action potential, the limiting membrane conductances (gNa and gK)

DD FORM 1 JAN 73 1473 EDITION OF 1 NOV 65 IS OBSOLETE
S/N 0102-014-6601 |

SECURITY CLASSIFICATION OF THIS PAGE (When Data Entered)

AD A050805
AD No.
DDC FILE COPY
DDC
FEB 21 1978
F

the peaks of sodium inward and potassium outward ionic currents, the net ionic charge accumulation per action potential and the propagation velocity of the action potential, were all transiently altered. The water membrane permeability and the fraction of the cell volume which is osmotically available were also transiently altered.

The analysis of these parameters has shown that the transient changes evoked by microwave radiation are higher in muscle cells from "winter frogs" than from "summer frogs", recovering their initial control values within time constants of approximately 20 and 3 minutes, respectively. Thermal effects on these parameters of muscle cells evoked by non-electromagnetic heating were eliminated by cooling, corresponding to time constants between 1 and 2 minutes.

Seasonal differences in the observed transient microwave radiation effects are analyzed. It was concluded that microwave exposure to $10 mW/cm^2$ did not produce permanent effects on electrical and cell water parameters.

FINAL REPORT

(11) Jan[illegible]78 (12) 66P.

(6) Transient Effects of Low Level Microwave Irradiation on Bioelectric Muscle Cells Properties and on Water Permeability and Its Distribution.

(9) Final rept.,

by

(10) Adolfo/Portela[1], Osvaldo/Llobera[1], Solomon M./Michaelson[2], P. A./Stewart[3], Juan C./Pérez[1], Ariel H. Guerrero[4], Carlos A. Rodríguez[4] and Roberto J. Pérez[4]

1 Instituto de Investigaciones Biofísicas
Consejo Nacional de Investigaciones Científicas
y Técnicas - Viamonte 1634 - Buenos Aires
República Argentina

2 Department of Radiation Biology and Biophysics
School of Medicine
Rochester University - New York 14642 - U.S.A.

3 Brown University
Biomedical Sciences Division
Providence, Rhode Island, U.S.A.

4 Comando General del Ejército
Jefatura III - Operaciones - Departamento de Investigación
y Desarrollos - Buenos Aires - República Argentina

387106

ACCESSION for
NTIS
DDC
UNANNOUNCED
JUSTIFICATION
BY
DISTRIBUTION/AVAILABILITY CODES
DIST. AVAIL. and/or SPECIAL
A

(15) N0001 4-68-C-0313

This work was supported by the Office of Naval Research Contract N00014-68-C-0313, U. S. Navy Department; the Comando General de la Armada Argentina; the Comando General del Ejército, Direccion General de Investigación y Desarrollo, Ministerio de Defensa, República Argentina and the U. S. Atomic Energy Commission.

B 387106 JOB

ABSTRACT

Microwave radiation effects on passive and dynamic electrical properties and on cell water parameters were studied in muscle cells from muscles of the South American Frog Leptodactilus Ocellatus. Microwave exposure of 10 mW/cm^2 for a period of 120 minutes has produced transient changes on specific membrane resistance, R_m, the membrane capacitance C_m and the space constant λ. Those electrical parameters related to the excitation and propagation of the action potential, i.e. the rate constant, k_r and k_K, the maximum rate of rise $\dot{V}r$ and fall $\dot{V}f$ of the action potential, the limiting membrane conductances (gNa and gK), the peaks of sodium inward and potassium outward ionic currents, the net ionic charge accumulation per action potential and the propagation velocity of the action potential, were all transiently altered. The water membrane permeability and the fraction of the cell volume which is osmotically available were also transiently altered.

The analysis of these parameters has shown that the transient changes evoked by microwave radiation are higher in muscle cells from "winter frogs" than from "summer frogs", recovering their initial control values within time constants of approximately 20 and 3 minutes, respectively. Thermal effects on these parameters of muscle cells evoked by non-electromagnetic heating were eliminated by cooling, corresponding to time constants between 1 and 2 minutes.

Seasonal differences in the observed transient microwave radiation effects are analyzed. It was concluded that microwave exposure to 10 mW/cm^2 did not produce permanent effects on electrical and cell water parameters.

ACKNOWLEDGEMENT

We are indebted to Dr. Atila Gosztonyi, Margarita Brennan and Marcelo Campi for their assistance in the electrical and permeability measurements and statistical work. We are also indebted to Professor Dr. Lev Kayushin, from the Institute of Biophysics Academy of Sciences of the USSR, Moscow, and members of the Institute for stimulating discussions with Professor Portela during his recent visit, under the auspices of the Academy of Sciences of the USSR.

INTRODUCTION

Microwave radiation at sufficiently high power levels is known to cause biological effects mainly due to the generation of heat in the organism. Effects observed at high levels include observable lesions, secondary injury from hyperthermia and cataract formation (Carpenter 1959, 1968; Michaelson 1971).

Some workers have suggested that the Nervous System is transiently affected by microwaves, even at low power densities exposures of microwave radiation. The extent and importance of more subtle changes which may occur at lower level powers particularly with continued or long term exposure are not known adequately (Diehl 1972; Frey 1961-1971; Gordon 1961-1970; Houk 1972; Kamenskiy 1964, 1968; Lobanova 1962; McLees and Finch 1973; Pressman 1962-1970).

These radiation effects include neurasthenic responses to apparently low exposure levels and suspected behavioural changes, neuroendocrine effects, cardiovascular changes and other effects (Milroy 1972; McLees and Finch 1973).

With the exception of thermal effects induced by the agitation of polar molecules by the alternating electric field, little is known about basic interaction between the electromagnetic field and the molecular and cellular constituents of an organism. It is basically important to determine whether an observed effect is irreparable (irreversible) or merely transient (reversible), disappearing when the electromagnetic field is removed or after some interval of time.

Absorbtivity of microwave energy varies over regions of the body. Careful attention must be therefore given to dosimetry, exposure time, environmental considerations, field proximity, pulsed and continuous microwave energy, types and power outputs of microwave generators (i.e., frequency, average power density and peak power density in the pulsed condition, power density in the continuous wave condition) in relation to effects observed if any, and hazard potential

evaluated in the light of this information. The amount of microwave energy absorbed by an object, which is usually dissipated as heat, depends on the electrical properties of the object, the power density of the field and the frequency of the electromagnetic radiation with respect to the size of the object (Schwan 1954, 1971, 1972; Pressman 1962-1970; McLees and Finch 1973).

Thus, the range of the electromagnetic spectrum which could be expected to have a significant influence on muscular, neural and behavioural functions, would have to consist of frequencies which allow significant absorption of energy from the electromagnetic radiation. This has led to confine most studies to frequencies between 0.5 GHz and 10 GHz.

Power absorbed by an object from a radiation field will be dissipated in the form of heat. This is especially true for microwave fields and it has led to a considerably controversy as to whether neural and behavioural effects noted in such irradiation fields are due simply to heating of the living system (thermal effects) or to specific stimulating effect of the neural network by the electromagnetic radiation field (athermal effects).

The problem of changes in neuronal functions under low power density microwave fields has received considerable attention from several research scientists (Lobanova et al,1962; Kamenskiy 1964, 1968; McAfee 1959-1963).

The investigations conducted by Presman et al (1962,1963) have led to the hypothesis that microwave radiation stimulation basically alters those mechanisms involved in the function of excitatory structures (Lobanova, 1971).

This theory was advanced by Kamenskiy (1964) incorporating parameters of stimulation. Other investigators have refused to accept the possibility of athermal neural stimulation and have considered an explanation based upon local heating (McAfee 1969).

Several experiments have been done to study the effects of microwave irradiation on the nervous system of homeotherm and poikilotherm animals (McAffe 1959-1969). The experiments were designed to separate thermal from athermal neural effects. Refrigerated poikilotherm animals were irradiated with a power level of 45 mW/cm^2 for various periods of time. In addition, experiments at the same wavelength and power density were conducted on isolated nerve preparations.

Results from the peripheral nerve experiments indicate that previous reports of neural effects may be explainable as effects due to local heating of peripheral nerves rather than to excitation of the central nervous system (McLees and Finch 1973). The principal effect observed was a temperature dependent increase of motor activity of the irradiated animal. These experiments have indicated that the observed effects of microwaves on isolated nerve preparations were reproducible by equivalent non-electromagnetic heating.

It is well known, that in nerves the velocity of propagation decreases as the temperature is lowered (Helmholtz 1850) and the amplitude of action potential decreases until a temperature is reached when the nerve becomes inexcitable (Gasser 1931) even though the resting membrane potential at this temperature is only slightly affected (Lorente de No 1947).

The influence of heat in reversibly inhibiting various biological processes (Coraboeuf and Weidmann 1954; Crozier 1924-1926) has been discussed by Johnson, Eyring and Polissar (1954).

In nerve, a "heat paralysis" occurs when the temperature is raised to a certain extent, excitability is lost, but recovering takes place on cooling, provided that the nerve is not heated at high temperatures or maintained at a relatively high temperature for a long period of time (Davis 1926; Guttman 1969; Hodgkin and Katz 1949; Johnson 1957; Ling et al 1949; Moore et al 1972; Tasaki 1949;

Tasaki et al 1957; Tasaki and Spyropoulos 1957). Thus with some species of frogs, heat paralysis of nerve trunks occurs at temperatures between 32° and 40°C (FitzHugh and Cole 1964; MacFarlane and Meares 1958; Tasaki 1957; Thörner 1920) and the excitability is restored when they are cooled.

Presumably the effect here is fundamentally the same as in the reversible denaturation of proteins and enzymes in general, although some of the proteins and enzymes concerned in normal activity of a nerve are surely more susceptible to thermal inactivation, reversible as well as irreversible, than others.

Some of these systems are more sensitive in nerve than in other tissues.

Generally the effects of raising the temperature are reversible on cooling, provided that the system had not been maintained for any considerably long period of time at or above the temperature of maximal activity.

Schwan (1953-1972) has carried out studies of the electrical properties of living tissues and absorption characteristics of microwave radiation. He has pointed out that pulsed fields cannot be more effective than C.W fields of the same average power. Theoretical work was presented, establishing dielectric and conductivity constants as functions of macromolecular content and frequency, including determination of depth of penetration values and the relative absorption cross section of man.

Experiments were recently carried out in our laboratory (unpublished data) in living frogs. Irradiation has not permanently altered the velocity of propagation of the action potential measured in vivo and in vitro in the sciatic nerve trunk or skeletal muscle, provided that during the irradiation period the temperature of the frog biological preparations was kept constant using a refrigerated thermoregulated bath and perfusing system.

In many metabolic experiments, periodic daily changes have been observed. More striking are seasonal changes, when there is marked difference in summer and winter climates (Florkin and Schoffeniels, 1969). Seasonal differences in respiratory rates, osmoregulatory mechanisms, etc., in several species may be correlated with the animal's biochemical composition during the various seasons (Vernberg and Vernberg 1972). It is known that many physiological functions adapt themselves to environmental changes, as summarized by Proser (1958). Therefore, comparative studies of microwave radiation effects will be presented.

Recent work in this laboratory (Portela et al., 1974) indicated that muscle cells from winter frogs exposed during 120 min to microwave radiation (3GHz) with power densities between 0.5 and 10 mW/cm^2 present transient changes in several osmotic and electrical cell parameters (W_{eff}, P_w, R_m, C_m, $\bar{g}Na$, $\bar{g}K$, etc.).

The present study, which is a continuation of our recent work, was designed to analyze transient effects evoked by microwave irradiation at power density of 10 mW/cm^2, and to detect seasonal variations and thermal effects, in electrical and osmotic parameters of frog muscle cells. Muscle cells of summer's frogs are showing significantly lower microwave effects.

Thermal effects produced by non-electromagnetic heating were compared with induced effects of microwave irradiation, where heat was removed by a constant temperature refrigerating system.

Data here presented are oriented to establish criteria about a possible difference between thermal and non-thermal effects of microwave irradiation.

METHODS

Muscle preparation for muscle cell electrical properties measurements:

Sartorius muscles from the South American frog (Leptodactilus Ocellatus) were used. Fresh weights in the range from 45 to 47 mg sartorius muscles were carefully dissected from each frog with minimal damage to the fibers, leaving the lower side practically free of connective tissue. The nerves were severed at 1 cm from the muscle surface. The geometrical shape of this muscle corresponds to a plane sheet with the following dimensions: length 2 cm, width 0.4 cm, thickness 0.08 cm. The muscle density was estimated at about 1.07 g/cm^3. Membrane surface area measurements on sartorius muscle have been carried out by light microscopy measurements. Diameters and lengths of fibers (i.e. intact cells) gave a mean diameter of 78-80 micron. The average cell membrane surface value is per gram of muscle 500 $\pm$ 50 cm^2. (volume/surface, ratio: 0.002 cm). The average extracellular space for sartorius muscle was 26% of muscle wet weight (Portela et al 1965).

The nerve-muscle preparations were used following procedures identical to those described in Portela, et al (1970; 1970a,b; 1974). End plate regions as well as the end plate free regions toward the end of the cells were carefully identified on each muscle cell studied by following the techniques of Fatt and Katz (1951), Thesleff (1955). and Portela (1970a,b).

By carefully mapping the microscope field, it is possible to identify a particular cell and to return the microelectrode later to within 50 micron of the same cell. Bioelectrical responses evoked by means of intracellular stimulation were measured repeatedly by short term micropippette electrode insertions. Consequently, the electrical parameters of the muscle cell membrane free of motor end plates were analyzed.

Membrane electrical constants were determined following the general methods of Fatt and Katz (1951) and Portela, et al (1970, 1974). The calculations were based on the cable analysis of Hodgkin et al (1946), Katz (1948), with modifications necessary for intracellular microelectrodes of Fatt and Katz (1951), Portela et al (1974), and Hubbard (1963), Frank et al (1964), Plonsey et al (1969).

The minimum strength of the rectangular current pulse required to initiate an action potential was determined following methods in Portela et al (1974).

Dynamic electrical parameters of the active membrane, including the magnitude of the ionic current associated with the action potential were calculated following the techniques and analytical procedures described by Jenerick (1963, 1964), Minorsky (1947), Graham et al (1961) and Portela et al (1974), assuming that similar events occur on the genesis of the action current in muscle cells as postulated in the Hodgkin-Huxley model of the nerve axon (1952).

Therefore it was assumed that the membrane action current of muscle cells conducting a propagated action potential obeys the cable equation (Hodgkin and Huxley 1952; Portela,et al 1974):

$$(a/2R_i\,\theta^2)\ .\ d^2V/dt^2 = C_m.dV/dt + I \quad \text{or}$$

$$d^2V/dt^2 = k_r(dV/dt + I/C_m) \qquad (1)$$

where "a" is the fiber radius; R_i the specific resistivity of the intracellular fluid (250 ohm-cm); θ the propagation velocity; V magnitude of the membrane potential; C_m membrane capacitance; I the ionic current; k_r rate constant for the initial step of the action potential ($2R_i\theta^2C_m/a$); I_t the total membrane current, equal to the sum of the capacitative and ionic currents.

The propagated action potential was recorded against its first time derivative (Portela, et al 1973, 1974). The equation (1) was rearranged to obtain a convenient expression for manipulation of the phase plane data (V,dV/dt):

$$I = C_m \, dV/dt \quad (m/k_r - 1) \qquad (2)$$

The phase plane trajectory of the action potential allowed to obtain a point by point graphical solution of equation (2) where dV/dt (or $\dot{V}$) is the ordinate, and $m = d\dot{V}/dV$ is the slope at any point. Thus, an ionic action current-membrane potential plot (I-V) throughout the action potential was traced, i.e., the tracing of the calculated ionic membrane current I as a function of membrane potential V. The value of membrane capacitance C_m was obtained from the passive membrane electrical parameter measurements. The tracing of the action potential as V,dV/dt and the calculated ionic current I versus V are simultaneously plotted in Figure 1 (a,b). These curves were drawn based on average data. From the relationship I-V and membrane potential as function of time (V,t), the total ionic current as function of time (I,t) is obtained, as shown in Figure 1 (a,b) on the basis that V,dV/dt and V,t have been simultaneously recorded. The integration of the area under the curve I,t gives the total ionic charge "q". The areas under the inward and outward ionic currents correspond to a net uptake "q_i" and a net loss "q_o", respectively, per action potential.

The flow diagram for obtaining the above indicated parameters is given in Figure 2. The advancing foot of the action potential rises exponentially in time with a rate constant k_r (Plonsey 1969) corresponding to the first linear region of the phase plane trajectory of the action potential. During the interval of time that this linearity lasts from the resting membrane potential V_r to the excitation potential V^*, the current drawn through the membrane is mainly capacitative.

Following membrane excitation at V^*, there is rapid inward sodium current I flowing through a negative conductance -gNa, which depends nonlinearly on the magnitude V of the membrane potential. The magnitude of the peak sodium inward ionic current I_i is related to the maximum rate of rise of the action potential $\dot{V}+$. The inward ionic current decreases linearly with the change of V, corresponding the limiting membrane conductance gNa. If the value of gNa should remain constant and the inward ionic current was due exclusively to sodium ions, the sodium equilibrium potential V_{Na} should be reached. The predicted value of V_{Na}, is inferred from the rate constant k_{Na} intercept in the membrane potential V axis, as shown in Figure 1a. The system does not reach V_{Na} but instead it tends to a lower transient state V_s, i.e., the maximum amplitude of the propagated action potential. The second linear region of the phase plane trajectory with a rate constant k_{Na} corresponds to the gNa given in the I-V plot. Following V_s, the ionic actior current reverses, becoming outward and reaching the peak outward ionic current I_o, which is approximately proportional to the maximum rate of fall of the action potential ($\dot{V}-$).

The outward ionic current is mainly carried by potassium ions. After I_o is attained, the magnitude of the outward potassium ionic current I varies linearly with V corresponding to the limiting membrane conductance gK. The indicated process tends to reach the initial value of the negative after-potential V_n (or V_{on}), corresponding to a linear trajectory of slope k_K. From plotted data in Figure 1 (a,b) it is observed that

there is a shift of the peaks of inward sodium or outward potassium ionic currents (I_i or I_o) as related to the $\dot{V}$ + or $\dot{V}$-, respectively (i.e., also inferred from the values corresponding to the first and the second inflection points). The linear regions of phase plane plot V,dV/dt given as k_r, k_{Na} and k_K were mathematically treated as described (Portela, et al, 1974) allowing us to define the limiting membrane conductances for the inward and outward ionic currents:

$$gNa = C_m \left[(k_{Na} / k_r) \quad (k_{Na} + k_r) \right] \text{ and}$$

$$gK = C_m \left[(k_K / k_r) \quad (k_K + k_r) \right]$$

The electronic system used and block diagram of interconnections is presented in Figure 3. The instrumental arrangements are described in greated detail in Portela, et al (1974). This system automatically obtains the electrical data for determining the indicated parameters.

The nerve-muscle preparations were bathed with Ringer solution (pH 7.2 - 7.4) of chemical composition given in Table I. The osmolarity of solutions was checked cryoscopically. All experiments were carried out at 25°C;temperature dependence of the passive and active electrical membrane parameters (as well as cell water parameters) were also studied at the temperature range from 20°to 30°C. Biological preparations were perfused with Ringer solutions for 30 minutes following dissection, before experiments started.

Irradiation Procedures

Two types of experiments were run simultaneously for determining the final criteria for irradiation procedure, as following these protocols:

1.- One chamber of each pair of sartorius muscle from the same frog was irradiated. Control muscles occupied similar plastic chambers outside the irradiation room during irradiation exposure and were otherwise treated identically. Within 5 seconds after completion of irradiation, the electrical measurements were obtained from the identified muscle cells as above described. This procedure is described in detail in Portela, et al (1974).

2.- The electrical measurements were done in the same muscle before and 5 seconds after irradiation, in the identified muscle cells. The control cells from protocol (1) measurements thus provided non irradiated control data for protocol (2) measurements. The striking feature of these data is the constancy of the electrical membrane parameters for both controls. There was no statistical difference between the electrical parameters for controls determined following these two protocols. The irradiation data from these two experimental procedures were also similar. Thus, the data presented in this work were obtained following the criteria established in protocol (2).

The nerve muscle preparation was irradiated in the perfusion chamber, and exposed to 10 mW/cm^2 during a period of 120 minutes, in the far field region on the axis of the horn antenna.

Data presented here were obtained between July 1971 and March 1974.

Preliminary work was recently published, reporting data from muscle cells corresponding to frogs of winter seasons (Portela et al 1974). The present study is an extension of that work, comparing data with those obtained in frogs of summer seasons.

Continuous removal of electromagnetic radiation heating by the cooling system: Apparatus for perfusion of nerve-muscle preparation.

Special attention has been given to temperature control of the perfusion apparatus to ensure constant temperature. The nerve-muscle preparation is held in a water-jacketed chamber of cylindrical geometry of 1 centimeter diameter and 10 centimeter length (internal dimensions) with a sintered-glass filter disc sealed into the top portion. The inflowing normal Ringer solution is delivered by means of a teflon tubing (3 millimeter internal diameter) and the outflowing fluid is recirculated by a roller pump from a reservoir of 200 cm^3 containing the Ringer solution at the desired temperature, controlled by the thermoregulated bath system (Figure 4). The biological preparation is perfused with a flow rate of 50cm^3/minute. The additional circuitry for temperature control of the water jacketing

of the nerve-muscle chamber assures the chosen temperature, by means of a high flow rate of KC1-dioxane-water solution of 5 liters/minute.

The temperature is recorded in the water circuitry at the convenient points indicated in Figure 4. In addition, the temperature of the biological preparation perfusion normal Ringer solution is monitored.

The reservoir containing the perfusion solution is enclosed in the KC1-dioxane-water solution temperature regulated bathed system, assesing equal temperature at the biological preparation perfusion chamber and water-jacketing system. The water jacketing system enclosing the perfusion nerve-muscle chamber has a spherical form, made of Pyrex glass and capacity 5 liter. The radius of this sphere is 10.7 centimeter. The KC1-dioxane-water solution is supplied from the thermostatically controlled KC1-dioxane waterbath and circulator, which contains a refrigerating and heating system and is recirculated at a flow rate of 5 liter /minute. This equipment allows us to maintain the temperature, both perfusion solution and KC1-dioxane-water solution cooling system within $\pm$ 0.02°C, in the range 0° to 50°C.
The nerve-muscle preparations were mounted in the teflon holder device at 120 percent of their resting length, adjusted by means of a special teflon micrometric system. This holder is plugged in the water spherical jacketing system as indicated in Figure 4. The sealed perfusion chamber has a capacity of 10 cm^3.

Biological preparations mounted as described were exposed to a power density 10 mW/cm^2 during a period of 120 minutes. The chosen exposure time, corresponds to one in which reversible effects on the studied parameters are observed. The higher flux of 10 mW/cm^2 will increase the temperature of 1 gram of muscle tissue (density 1.07 g/cm^3) by 1.5°C after 10 minutes of exposure, provided that this power is entirely absorbed. Temperature distribution in the biological preparation irradiated by the external microwave energy source, was estimated by solving the thermal diffusion equation as described by Chan et al (1973). The thermal conductivity and the specific heat coefficients were determined (Ponder 1962), giving the values 0.0012 cal $cm/cm^2 \cdot sec \cdot °C$

and 0.085 cal/g °C, respectively. The Ringer solution at the chosen temperature perfused into the nerve-muscle chamber directly cooling the preparation. This is due both to the adequate Ringer fluid flow through extracellular space and to the optimal thermal properties of the muscle for its capacity to conduct heat. The external thermal regulation device here described, permits a rapid heat transfer to the Ringer solution (Liang-Tseng Fan et al 1971; A.K. Chan et al 1973; Shitzer 1973)

Temperature dependence of the passive and active electrical, and cell water parameters

To study temperature relationship of the analyzed parameters we used as mathematical model the Arrhenius equation. Temperature of the thermoregulated bath system was adjusted to the values indicated in Table VII. The temperature of the nerve-muscle preparation was monitored with thermistor probes placed in the vicinity of the recording microelectrodes. The "cable" as well as the active electrical parameters were determined as previously described. The values of several parameters of the action potentials depend on the magnitude of the membrane capacitance C_m (Nastuk and Hodgkin 1950). Since C_m has not been observed to be temperature dependent between 20°and 30°C, corrections are not applied to its values. Muscle cell water parameters were simultaneously determined following procedures here described.

Microwave Irradiation

The nerve-muscle preparations were exposed to microwave energy, corresponding to a power density of 10 mW/cm^2, by means of an APS20 Radar Transmitter System. The microwave generator has the following characteristics: Frequency: 2.88 GHz; wavelength 10.41 cm.; peak power 2 megawatts; pulse width 0.67 microseconds; pulse repetiton rate 900 ppsec; duty cycle 6×10^{-4} and average power 1.2 kilowatts.

The calibration of the radar unit and power density measurements were

done following the general procedures used by Schwan et al (1961). The power delivered from the generator to the transmitting antenna was attenuated, with the purpose of obtaining a power density in the indicated range. This attenuation was achieved by means of a 20 db calibrated directional coupler, the main branch of which is connected to a higher power load termination, while the secondary branch is coupled to the horn antenna (15.62 db at 2.88 GHz, similar to a Narda 644). The output power of the microwave generator was measured before and after exposure by means of a water calorimeter. The SWVR of the load was determined using a slotted section and a Standing Wave Meter. For all cases the SWVR magnitude was found to be 1.18 indicating that practically the entire power delivered to the antenna was radiated. The equipment components are schematically shown in Figure 4; to perform the different measurements, they are arranged as follows:

a) Output measurements: the power calorimeter load (6) is connected to the output F of the directional coupler (8). The SWVR is determined with (1).

b) Low power irradiation (12 Watts): The horn antenna (11) is connected to the secondary branch C of (8), and the power load (7) to the output F of (8).

c) High power irradiation (1.2 KW): (11) is connected to the output F of (8) and (7) to the output C of (8).

d) Relative field strength pattern: (11) is connected to the low power microwave generator (9). The relative field strength signal is received by antenna (14) and measured by SWVR metter (18) through (17) and plotted by (13).

e) Power density measurements: the power delivered by (14) is measured by power meter (16) through (15) and plotted by (13).

For all the above measurements, the output signal is monitored by oscilloscope (4), the frequency by (3) and the output power by (5).

The symmetry of the irradiation pattern of the transmitting antenna was determined in order to ensure the non-existence of stationary waves inside the irradiation room. For this determination the horn antenna was connected to a low power microwave generator and a receiving system for measuring the relative field stregth was used. The receiving system consists in a quarter wave dipole antenna (14) connected to a detector diode (17) and a SWVR (18) used to amplify and measure the signal from the receiving antenna.

For the purpose of facilitating pattern determination, the receiving antenna was mounted on a carrier-servosystem which permits the scanning of antenna position in an X-Y transverse plane relative to the irradiation axis. Power density measurements were performed connecting the quarter wave receiving dipole (14) to a 430 HP power meter (16) with a 477 thermistor (15). The calculated values of power densities at various distances in the far field on the axis of the horn antenna were in close agreement with Schwan's data (1961).

Muscle preparation for studying muscle cell water parameters

By straightforward application of single compartment analysis techniques, it is possible to evaluate the osmotically effective fractional volume, W_{eff}, and the cell membrane water permeability, P_w, of a living cell from measurements of the transient changes in cell volume after a step change in the osmolarity of the bathing fluid. We have recently applied this technique to the analysis of radiation or denervation effects on single muscle cells (Portela et al, 1971,1974). The procedures involve isolating a single muscle fiber in an appropiate bathing chamber, and measuring its diameter every 10 sec over a period of 5 min, following an abrupt change in osmolarity of the bathing solution.

The fiber is mounted so that the length changes, which should not occur can be detected. Effective fiber volume per unit length can be calculated from the diameter measurement, and volume changes with time can thus be computed. Frog Tribialis anticus muscles, from both legs, with fresh weights in the range 45 to 47 mg, were dissected free, with as long a tendon as possible still attached to each end, and mounted in a special plastic

perfusion chamber, equipped with small plastic platforms to which the tendons could be secured by insect pins. Dissection was carried out under stereomicroscopic observation. With fine dissecting instruments, the tendon at one end was carefully sectioned longitudinally and the excess muscle cells teased away, until a single intact muscle fiber was left still normally attached to its tendons. Throughout this process, the muscle was covered at all times with normal Ringer solution maintained at 25°C. The muscle and the supporting plastic platforms were arranged so that the single fiber lay in the solution with a slight arc downward, both to ensure that it was not under excessive tension and also to control the length of the fiber. During subsequent treatment which might result in a shortening or lengthening of this arc and therefore cause the central part of the fiber on which radius measurements were made to go out of focus. The fact that this did not happen provided a check on the constant length of each fiber during an experiment.

Chamber and bathing solution changes

Since the cell volume changes occur over a period of about two minutes after changing the bathing solution, it is essential to be able to change the solutions in a few seconds. This was accomplished by a specially made flushing valve, which connected the chamber to the gravity-fed supply lines from the solution reservoirs and to the vacumm powered drain tube. When this valve was turned on, the old solution was withdrawn from the chamber at the same rate as the new solution entered, so that the level of fluid in the chamber remained constant. Complete flushing occured within three seconds. Operation of the flushing valve was carefully synchronized manually with the shutter of the camera. The volume of the muscle chamber was 10 cm^3.

Bathing solutions:

Two bathing solutions were used in these experiments, normal Ringer and half-osmolarity or "test" Ringer. Their compositions are specified in Table 1

Normal Ringer has an osmolar concentration of 0.222 osmol/liter and produced no detectable changes in muscle cell volume. Osmolarity of test Ringer is 0.111 osmol/1.

All solutions used were bubbled with 95% O_2 - 5% CO_2 outside the muscle chamber, had a pH of 7.2-7.4 and were maintained at 25°C.

Single Muscle Cell Radius Measurements and Volume Calculation

Once the single muscle fiber was prepared, the dissecting microscope was replaced by a camera-microscope combination appropiately focused on the center of the fiber. Photomicrographs of the muscle cell were taken every 10 seconds over the 5 minute period following each solution change, as indicated in Figure 5. After development and magnification, the diameter could be measured in this final image with a precision about 2%. Cell volume per unit length was calculated by assuming the cells to be uniform circular cylinders.

Cells were perfused and photographed for 5 min with normal Ringer. The perfusing fluid was then changed to the test Ringer solution, and perfusion and photographing continued for another 5 min. The perfusion fluid was then changed back to the normal Ringer and another 5 min period of perfusion and photographing carried out. This entire cycle was subsequently repeated twice as indicated in Figure 5.

Two types of experiments were run simultaneously, according to the protocols indicated schematically in Figure 5 (Portela et al, 1971,1974). In type A, the cell was perfused and photographed for 5 minutes with standard Ringer. The perfusing fluid was then changed to the test solutions and perfusion and photographing continued for 5 min. The perfusion fluid was then changed back to the standard Ringer, and another 5 min period of perfusion and photographing carried out. The entire cycle was subsequently repeated at 120 min and again at 180 min.

In type B. protocols, the second cycle of solution changes was replaced by a 120 min irradiation period. The muscle cell was irradiated in the perfusion chamber. Within 60 sec after completion of irradiation, the cycle

of normal standard Ringer, half normal standard Ringer, and normal standard Ringer solution perfusions, was repeated. The Type A measurements provided non-irradiated control data for the type B.

Determination of Osmotically Effective Volume Fraction, W_{eff} and water Permeability, P_w.

The derivation and details of the procedure are given in Portela et al (1971, 1974). Provided the test solution is half normal Ringer, W_{eff}, is given by:

$$W_{eff} = (V_c - V_{co}) / V_{co}$$

where V_{co} is the cell volume in normal Ringer and V_c in the test Ringer. The quantity $V_c - V_{co}$ is called V_e, and can be shown to equal the osmotically effective volume of the cell in normal Ringer when the osmolarity of the test Ringer is exactly half (1/2) that of the normal Ringer (Portela et al 1971, 1974).

The value of P_w is determined by matching computed solutions for the non linear differential equation describing cell volume changes to the measured volume versus time curves. The computed curve which most closely fits the data, then provides an estimate for the value of P_w for that fiber under those conditions. The uncertainty in estimation of P_w in this situation is less than 0.03 P_w units. Curves were calculated by numerical solution of the non-linear differential equation describing cell volume V, as a function of time, incorporating the assumption of the previous paragraph. This equation is

$$dV/dt = P_w . 2\sqrt{\pi V} \left[C_o . V_e / V - (V_{co} - V_e) - C_e \right]$$

where C_e is osmolarity of bathing solution, and the other symbols have already been defined.

RESULTS AND DISCUSSION

Seasonal differences in the observed transient microwave radiation effects on the passive and dynamic electrical properties and cell water parameters of muscle-cells, from muscles of the South American frog (Leptodactilus Ocellatus) are here reported, indicating less effect during the summer than in the winter. The effects were produced under microwave irradiation exposure of 10 mW/cm^2 for a period of 120 min.

Mean values and corresponding t-test for significance of muscle cell parameters determined before and immediately after irradiation, in experiments developed during winter and summer seasons for the period July 1971 and March 1974, are presented in Tables. Data for "Winter frogs" were obtained from 60 cells of 20 different muscles and data corresponding to "Summer frogs" were from 80 cells of 27 muscles.

Passive Electrical Membrane Parameters

An interesting feature of these data is the constancy of the passive and dynamic electrical membrane parameters of control muscle cells throughout Winter or Summer seasons. Seasonal variations were not observed in these electrical membrane parameters. Immediately after microwave exposure, early transient effects have been observed in the specific membrane resistance R_m, the membrane capacitance C_m and the space constant λ of muscle cells. However, this microwave radiation effect was slightly higher on those muscle cells from Winter frogs. Data are presented in Table II. The observed changes in the magnitude of the indicated electrical membrane parameters are transient, recovering their initial control values within time constants of approximately 3 min for the observed value changes in muscle cells from summer frogs, and approximately 20 min, for muscle from winter frogs.

Action potential propagation

Immediately after microwave irradiation an early transient increase in the magnitude of the propagation velocity of the action potential θ , was observed. This effect was higher in muscle cell from "winter frogs", recovering the normal value with a time constant of approximately 20 min while the induced effect on cells from "summer frogs" was characterized by a faster recover of θ, with a time constant of approximately 3 min. Data are presented in Table III.

Dynamic Electrical Parameters of the Active Membrane

The mean values of the main characteristic parameters of the propagated action potential obtained from recordings of the phase plane trajectory (V,dV/dt) and membrane potential against time (V,t) as presented in Figure 1 (a,b)are given in TablesIII,IV and V. Data corresponding to control and immediately after irradiation of muscle cells conditions, are given with the corresponding t-test for significance. Microwave irradiation has evoked a transient increase in the active membrane parameter $\dot{V}+$, $\dot{V}-$, V_{os}, V_{Na} and V_s.

The transient increase in the magnitude of V_{os}, V_{Na} and V_s as shown in Table III and Figure 6, were related to the increase in the maximum rate of rise of the propagated action potential. The calculated ionic current associated with the propagated action potential is presented in Figure 1 (a,b) as a locus on the I-V plane. These parameters from the ionic current-membrane potential relations are given in Tables IV and V, and Figures 7, 8, 9 and 10. From the I-V relations is clear that microwave energy absorption has enhaced the peak inward sodium current I_i. The inward ionic current from irradiated cells developed faster than before irradiation (control condition) as illustrated in Figure 1 (a,b) corresponding to the increase of the rate of rise dV/dt of membrane potential V and the increase of membrane negative conductance -gNa; consequently, a higher peak inward ionic current I_i was reached early.

Microwave irradiation, however, had virtually no effect on excitation.

The excitation potential V^* refers to the value of the membrane potential at which regenerative activity begins as given in Figure 1 (a,b) and Table IV. It must be noted that the magnitude of the predicted sodium equilibrium potential V_{Na}, is probably a function of the magnitude of the early inward sodium and outward potassium ionic currents. The observed shift in V_{os} and V_{Na} may be expected as a consequence of the net inward sodium current associated to a transient increase in the magnitude of the limiting sodium conductance gNa (Table V and Figure 10). The time to peak Na current was decreased as reported early (Portela et al 1974) and related to the magnitude of $\dot{V}+$.

The outward ionic current, mainly defined as corresponding to potassium ions, reaches the observed transient increase of the peak outward ionic current I_o, shortly after the second inflection point V_j of the action potential as shown in Figure 1 (a,b) and Table IV. However I_o bears a close relationship to the maximum rate of fall of the action potential ($\dot{V}-$). The magnitude of I after I_o was attained, is related to the increase value of the limiting potassium conductance gK. The initial value of the negative after potential V_{on} (or V_n) had not been altered by microwave irradiation (Tables III and V).

The rate constants for the foot of the action potential k_r, and for the terminal region of the action potential k_K were transiently increased. However the rate constant k_{Na} was not altered (Table V and Figure 8). Therefore the transient increase in gK is given by the observed changes in k_r, k_K and C_m and for gNa as due to changes in k_r and C_m.

From the analysis of the above studied parameters, it is shown that the transient changes evoked by microwave radiation are higher in those experiments done during winter seasons (see Figure I and Table IV).

The net charge accumulation Δq, associated in the generation of an action potential is diminished by microwave irradiation exposure, even though both q_i and q_o were increased.

Data show that the transient changes in the magnitude of passive

or active electrical membrane parameters were higher in muscle cells from "winter frogs" than from "summer frogs", indicating that seasonal environmental changes may bring about adaptive alterations in living organisms, causing changes for hierarchical order of cellular control functions. The transient changes produced by microwave irradiation on the indicated parameters return to normal values following similar time courses for muscle cells from frogs of the same season (figures 6, 7, 8, 9 and 10). The difference between time constants, for summer and winter frogs, is remarkable in this amphibious specie Leptodactilus ocellatus.

The analysis of the striated muscle cell action current and related parameters associated with the propagated action potential have indicated the influence of microwave energy absorption on the cell molecular structures responsible of excitation and cell conduction.

Muscle Cell Water Parameters

The averaged results of experiments on a group of 60 single cells from muscles of 20 "winter frogs" and on a group of 80 cells from 27 muscles of "summer frogs", are presented in Table VI.

The Figure 5 is illustrating those typical experiments reported from winter frogs. As it was recently reported, reducing the bathing solution osmolarity to half-normal, results in a significant volume increase as expected (Portela et al 1971, 1974). Noteworthy is the constancy of cell volume after equilibration, in all cases and even more important, its reproducibility on repeated changes, back and forth between normal and half-osmolarity solutions as given in Figure 5.

Since the cell volume repeatedly achieves constant values in both normal and test solutions, all fluxes of ions, water and non-electrolytes into and out of the cell must be in balance under both these conditions, either in control or irradiated systems.

Furthermore, since the values are reproducible over a number of normal → test → normal cycles (Figure 5), there must be no loss of solute in the test solution conditions. In addition, the fact

that the different volume changes in muscle cells, immediately following irradiation are equally reproducible means that, whatever the internal transient compartmental changes inducing microwave energy absorption (indicated by the increase of both, the W_{eff} and P_w), they are not apparently affected by the cell stretching experienced in test solution. Immediately after microwave irradiation, although a greater swelling is observed in the cells under test solution, normal cell volume is again observed when returning to standard Ringer.

The magnitude of W_{eff} as well as of P_w are transiently increased by the effect of microwave irradiation, having less effect during summer than winter seasons, as shown in Table VI. These transient effects on cell water parameters dissapeared within 10-20 min following irradiation. However, the time courses of recovering are similar for experimental data from either summer's or winter's muscle cells. Nevertheless, the W_{eff} and P_w control data values from winter and summer frogs show a significant difference.

Those values of W_{eff} and P_w corresponding to cells of winter frogs are significantly lower (P less than 0.001, by t-test) suggesting a consolidation or "tightening up" of the muscle cell structure in winter as compared to summer frogs.

Moreover these data indicate that the irradiated cell has not changed its initial water content, but has transiently increased the membrane water permeability and the water fraction which is available for free exchange with extracellular fluid. These transient changes must be correlated to the observed increase of ion conductances and ionic currents (G_m, gNa,gK, etc.). Data suggest that the observed seasonal differences in the magnitude of microwave irradiation effects may be related to specific cellular mechanisms of physiological adaptation, depending on adaptive changes which affect specific molecular controlling properties of membrane cellular structures and cellular metabolic regulations.

Cellular living processes cannot proceed normally unless a relatively constant temperature is maintained, either in the environment or

internally; in this regard, in poikilotherms, the thermal properties of the water should be of fundamental importance. The metabolic processes in summer's frogs Amphibious Leptodactilus ocellatus generate heat, but as a consequence of the fact that actively metabolizing tissues (i.e., muscle) are at least 75-80% water with its high heat capacity, the resultant temperature increase is minimized. The observed summer values of cell water parameters may be consistent with protection mechanisms from fluctuations in temperature.

Therefore, from the comparative analysis of data from both seasons, and assuming that the effects of microwave radiation mainly results from heat generation, it is inferred that the observed lower response to microwave exposure during summer may be due to the high ability of water to dissipate heat, reinforced by seasonal adjustments of water parameters (McLees and Finch 1973).

Non-electromagnetic heating effect on passive and active membrane parameters, and cell water parameters.

The results concerning the thermal effects on the passive and dynamic electrical parameters and cell membrane permeability of muscle cells evoked by non-electromagnetic heating (i.e., heating the muscle preparation using the described thermoregulated bath and perfusion system) are presented in Table VII.

In the analysis of temperature relationships of these parameters, it appeared a linear relationship between the logarithm of the experimental variable and the negative reciprocal of absolute temperature, following Arrhenius equation. The resting membrane potential V_r, the resting membrane conductance G_m and the membrane capacitance C_m have not been affected by a 10°C increase in temperature, corresponding to the Q_{10} of 1.1 and 1.18, respectively. But, the main shape parameters of the propagated action potential trajectory, k_r, gNa, gK, $\dot{V}+$, and $\dot{V}-$, are affected by a definite temperature dependence (Portela et al 1974), as inferred from temperature coefficients, Q_{10}, between 2 and 2.27 given in Table VII. This is partly to be expected, since these parameters are dependent on various properties of the excitable

membrane (i.e., ionic currents; ionic conductances, voltage and time dependent; propagation velocity) and most likely are related to each other. It must be pointed out here that the ionic conductances of the active membrane are more temperature dependent than the conductance of the resting membrane G_m or of the various electrolyte solutions (Cole 1968; Tasaki 1957; Johnson, Eyring and Polissar 1954). As far as we are able to judge, the conductances measured here correspond to steady state periods, i.e., they remain constant for brief period of time during the membrane response (gNa, gK). Since this is so, present measurements are not made on the rates with which the conductances are changed, but rather on the temperature dependence of the magnitude of the ionic conductance itself. It is interesting therefore to note that these dynamic characteristics should be different from the resting membrane conductance G_m which has a Q_{10} of 1.18

This suggests that the process of action potential generation cannot be due to simple increase or enhancement of the normal passive mode of membrane ion penetration.

Employing kinetic interpretation, the higher Q_{10} and the corresponding Arrhenius thermal increments between 12 and 14 kcal/mol, would thus imply a more energetic process than diffusion in an aqueous phase. For temperature coefficients Q_{10} from 1.0 to 1.3-1.6, it may be indicated that physical processes such as diffusion, probably control the resting membrane potential and the amplitude of the action potential

If so, the ion gradients postulated as the source of membrane potential are adequately maintained over this range of temperature (i.e., 20° to 30°C). The duration of the action potential (and the latency period) decreases by a temperature rise of 10°C, whereas the amplitude of the action potential is not significantly affected. The maximum rate of rise $\dot{V}+$ or the maximum rate of fall $\dot{V}-$ of the action potential are therefore temperature dependent as given in Table VII. The propagation velocity of the action potential θ and the rate constant k_r are tightly related (Portela et al 1974) and temperature dependent. (Mac Farlane et al, 1958).

The water membrane permeability is not clearly defined by a temperature dependence as inferred from temperature coefficient 1.63 and a maximum activation energy constant E_a 9.65 kcal/mol.

The transient increase of P_w by microwave irradiation may not be related to temperature as inferred from data given in Table VII.

These observed effects on muscle cells due to raising the temperature from 20°to 30°C resulted reversible on cooling and heating. These data are in general, consistent with results obtained by other authors (Tasaki 1957; Tamashige 1950; Ling and Gerard 1949; Hodgkin and Katz 1949; Nastuk and Hodgkin 1950; Davies 1926; FithzHugh and Cole 1964; Gasser 1931; Del Castillo and Machne 1953; Moore et al 1962) and analyzed by Johnson et al (1954) and Cole (1968).

The most remarkable changes observed during this part of the research work on frog muscle cell, i.e., k_r, gNa, gK, $\dot{V}+$, $\dot{V}-$, mainly refer to events during action potential propagation and apparently must be related to alterations in the rate constants of the dynamic membrane conductances, which are potential and time dependent (Hodgkin and Huxley 1952; Cole 1968; Portela et al 1974).

The water cell permeability coefficient is not significantly temperature dependent. The thermal effects on electrical parameters produced by non-electromagnetic heating at the pre-set temperatures ranging from 20° to 30°C were eliminated after setting the perfusion Ringer solution at 25°C corresponding to time constants between 1 and 2 min (Table VII). To increase the value of water membrane permeability coefficient P_w from 0.42 to 0.52, corresponding to an increase of 24%, it was necessary to rise 5°C the temperature of the bathing Ringer solution.

This data indicates that the observed transient increase of P_w by microwave irradiation, under constant temperature condition, may be not mainly related to thermal actions. Therefore, the comparative analysis of reversal thermal effects on the electrical dynamic membrane parameters of muscle cells in the experimented temperature range, as compared to those transient effects produced by microwave

irradiation exposure at a constant temperature of 25°C, may suggest an specific microwave radiation effect in the amphibious specie Leptodactilus ocellatus. On the other hand, the seasonal variation on the cell water permeability coefficient P_w and W_{eff} has apparently evoked a functional adjustment in the system which may react by decreasing the magnitude of the observed microwave effect probably by maximizing its capacity for releasing heat developed by microwave energy absorption. These preliminary studies may indicate that the observed transient effect on the electrical and water muscle cell parameters, may not be mainly due to thermal effects, but to additional specific microwave actions upon the highly ordered macromolecular membrane functional activities. Nevertheless, as it was pointed out recently (Portela et al 1974), it must not be discarded that electromagnetic radiation field interactions may induce localized heating effects at active sites of the complex molecular membrane stuctures, which may not be readily removed by simple cooling action of the perfusing Ringer solution system.

It will be necessary therefore to explore the capacity of muscle cells and their cellular components, to release absorbed heat, as well as to detect transient changes in specific membrane activities which play basic roles in the excitability as well as in those mechanisms related to the action potential propagation (Schwan 1972, Frey 1971, Michaelson 1971, Portela et al 1974).-

NOMENCLATURE

Passive Electrical Membrane Parameters

$2a$	Fiber diameter, micron
ϕ	Total effective resistance, k-ohm $\left(1/2 \sqrt{r_m \cdot r_i}\right)$
λ	Length constant, mm $\left(\sqrt{r_m / r_i}\right)$
R_m	Membrane specific resistance, k-ohm-cm^2
τ_m	Time constant, msec
C_m	Membrane capacitance, μF/cm^2
G_m	Membrane conductance, mmho/cm^2
d	$\sqrt{4Ri/\pi r_i}$
r_m	$2 \phi \lambda$
r_i	$2 \phi / \lambda$
r_m	Membrane resistance per cm of fiber length, ohm-cm
r_i	Resistance of the internal fluid per cm of fiber length, ohm/cm
R_i	Specific resistivity of the intracellular fluid, 250 ohm-cm

Dynamic Electrical Parameters of the Active Membrane

V	Membrane potential, mV

Transmembrane Potential from zero voltage reference:

V_r	Resting membrane potential, mV
V_{os}	Overshoot potential, mV
V_{on}	Initial value of the negative after potential, mV
V_{Na}	Sodium equilibrium potential, determined from k_{Na} rate constant in the V axis intercept, mV

V^* Excitation potential, mV

V_i Potential at the first inflection point, mV

V_j Potential at the second inflection point, mV

Transmembrane Potential, from reference resting potential:

V_s Maximum amplitude of the action potential, mV

V_n V_r minus the initial value of the negative after potential, mV

Time Derivaties:

dV/dt (or $\dot{V}$) First time derivative of the action potential, V/sec

$\dot{V}+$ Maximum rate of rise of the action potential, V/sec

$\dot{V}-$ Maximum rate of fall of the action potential, V/sec

Rate Constants:

k_r Rate Constant for the initial phase of the action potential $msec^{-1}$

k_{Na} Rate constant for second linear region of the action potential, $msec^{-1}$

k_K Rate constant for the terminal linear region of the action potential, $msec^{-1}$

Ionic Currents:

I_t Total membrane current ma/cm^2

I Membrane ionic current, ma/cm^2

I_i Peak sodium inward ionic current, ma/cm^2

I_o Peak potassium outward ionic current, ma/cm^2

Other parameters:

t time, msec

θ velocity of propagation of the action potential, m/sec

gNa Limiting membrane conductance for Na inward current, $mmho/cm^2$

gK Limiting membrane conductance for K outward current, mmho/cm^2

q_i Ionic charge uptake during generation of action potential, $\mu C/cm^2$

q_o Ionic charge loss during generation of action potential, $\mu C/cm^2$

$-gNa$ Negative Membrane Conductance, mmho/cm^2

Water cell parameters

V_c Volume per unit length of the muscle cell in a steady state in T = 0.5 Ringer

V_{co} Volume per unit length of the muscle cell in a steady state in standard Ringer.

T Tonicity of perfusing solution. By definition, standard Ringer (osmolarity 0.222) is assigned a value of T = 1.0, so that the solution of osmolarity 0.111 has a value of T = 0.5 and is referred to, as T = 0.5 Ringer

V_c/V_{co} Relative cell volume

W_{eff} The fraction of the cell volume per unit length which is osmotically available water, when the cell is in a steady state in standard Ringer. It is usually expressed as a percentage.

P_w Cell membrane permeability coefficient, per unit area of membrane, cm^4/osmol sec

Figure 1 (a,b)

Simultaneous tracing of the propagated action potential in (V,dV/dt) upper figure 1a, and in (V,t) lower figure 1b. The V axis (Horizontal) is common to both tracings, corresponding to figure 1a and 1b, respectively Calculated ionic current from equation (2) shows the action current during propagated action potential in both figures. Key to abreviations in the text.

Upper Figure 1a:

Average tracings of action potential recorded as a phase plane trajectory (V,dV/dt) and calculated ionic action current (I) against membrane potential (V); i.e., I-V relationship.

The membrane potential V axis (horizontal) is common to both tracings; i.e., plot of dV/dt (or $\dot{V}$; left vertical axis) and ionic current I (right vertical axis) as function of membrane potential V.

Light curve (control) and light dash curve (irradiated) are the average action potentials traced starting from V_r as a phase plane trajectory (V,dV/dt), before and after irradiation.

Heavy curve (control) and heavy dash curve (irradiated) are the calculated ionic current associated to the propagated action potential recorded before and after irradiation.

Lower Figure 1b

The light curve (control) and light dash curve (irradiated) are the average action potential traced, starting from V_r as a function of time (i.e. V,t), corresponding to the (V,dV/dt) curves in Figure 1a.

By properly combining V,t (Figure 1b) and I-V (Figure 1a) the ionic current I (lower horizontal axis) is traced against time (right and left vertical axis), i.e., I,t. This I,t relation is plotted as heavy curve (control) and heavy dashed curve (irradiated).

The integration of the areas under the curve of the ionic action current traced against time correspond to net uptake q_i and net loss q_o of charges.

Figure 2

Flow Diagram for obtaining indicated parameters, from the ionic current associated with the propagated action potential.

General block diagram of the electronic system of interconnections. See text for identifications of abbreviations.

The instrument connections allow recording membrane potential and stimulating current versus time, as needed for measurement of passive electrical parameters, threshold and propagation velocity, and first time derivative of membrane potential as $\dot{V}$ vs. V, and V vs t plots.

Figure 4

General block diagram of the Irradiation System.

Figure 5

Relative muscle cell volume, V/V_{co} versus time in minutes (V_{co} is the cell volume in normal Ringer solution). Osmolarity of perfusing solution changed as indicated by the arrows. Upper curve A is the averaged data for 60 control muscle cells; lower curve B for 60 irradiated muscle cells as indicated.

Figure 6

Transient effects due to microwave irradiation on the membrane action potential parameters V_s, V_{Na} and V_{os}.

Figure 7

Transient effects due to microwave irradiation on the maximum rate of rise $\dot{V}+$ and maximum rate of fall $\dot{V}-$ of the propagated action potential.

Figure 8

Transient effects due to microwave irradiation on the rate constants k_r, k_{Na}, and k_K for the exponential regions of the action potential.

Figure 9

Transient effects due to microwave irradiation on the peak sodium

inward and outward potassium ionic currents of the action potential I_i and I_o.

Figure 10

Transient effects due to microwave irradiation on the negative conductance -gNa and the limiting membrane conductances gNa, gK of the action potential.

LITERATURE CITED

Carpenter, R.L. "Studies on the Effects of 2450 megacycle radiation on the eye of the rabbit", in Proc. 3rd. Annu. Tri-Service Conf. Biol. Hazards of Microwave Radiating Equipments, C. Susskind, Ed. (Univ. California, Berkeley, Aug. 25-27, pp. 279 (1959).

Carpenter, R.L. and Van Ummersen, C.A. The action of microwave radiation on the eye. Journal of Microwave Power, 3:3-19 (1968).

Chan K.A., R.A. Sigelmann, A.W. Guy and J.F. Lehmann, Calculation by the Method of Finite Differences of the temperature Distribution in Layered Tissues. IEEE Transactions on Biomed. Engineering. Vol. BME-20 N°2: 86-90 (March 1973).

Cole, K.S. Membrane, ions, and impulses. University of California Press. Berkeley, California, U.S.A.: 144-256 (1968).

Coraboeuf E. and S. Weidmann. Temperature effects upon the electrical activity of Purkinje fibers. Helv. physiol. et pharmacol. acta, 12:33-41 (1954).

Crozier W.J. On biological oxidations as a function of temperature. Journ, Gen Physiol. 7:189-216 (1924).

Crozier W.J. The distribution of temperature characteristics for biological Processes; critical increments for heart rates. Journ. Gen. Physiol. 9:531-546 (1926).

Davis H. The conduction of the nerve impulse. Physiol. Rev. 6:547-595 (1926).

Del Castillo J. and X.Machne. Effect of temperature on the passive electrical properties of the muscle fiber membrane. J. Physiol. 120:431-434 (1953).

Diehl J.F. Enzyme Inactivation: The Behaviour of Iso-Enzymes, Particularly the Peroxidases, under the influence of Heat and ionizing radiation, Dechema Monogr.; 70, N° 1327: 265-277 (1972).

Fan L.T., F.T. Hsu and C.L. Hwang. A Review on Mathematical Models of the Human Thermal System. IEEE Trans, Bio-med Eng. Vol. BME-18 N°3:218-234 (May 1971).

Fatt P. and B. Katz. An analysis of the endplate potential recorded with an intracellular electrode. Jour. Physiol. 115:320-370 (1951).

FitzHugh R. and K.S. Cole. Theoretical potassium loss from squid axons as a function of temperature, Biophys. J. 4:257-265 (1964).

Florkin M. and E. Schoffeniels. Molecular Approaches to Ecology. Academic Press, New York (1969).

Frank K. and M.C. Becker. Microelectrodes for recording and stimulation, in Physical Techniques in Biological Research. 5:22-87. Academic Press, N.Y. (1964).

Frey A.H. Human auditory system response to modulated electromagnetic energy. Jour. of Appl. Physiol. Vol 17 N°4:689-692 (July 1962).

Frey A.H. "Auditory system response to radio frequency energy". Aerosp. Med. Vol. 32: 1140-1142 (1961).

Frey A.H. "Human response to VIF electromagnetic energy" Nav. Res. Rev. :1-8 (1963).

Frey A.H. "Some effects on humans of UHF irradiation", Amer. J. Med. Electron, Vol 2:28-31 (1963).

Frey A.H. "Heart function changes induced by illumination with modulated UHF energy" unpublished.

Frey A.H. "Behavioural biophysics" Psychol. Bul. Vol 63:322-337 (1965).

Frey A.H. Brain Stem evoked responses associated with low intensity pulsed UHF energy. Jour. of Appl. Physiol. Vol 23 N°6:984-988 (Dec. 1967).

Frey A.H., E. Seifert. Pulse Modulated UHF Energy Illumination of the Heart Associated with change in Heart Rate-Life Sciences Vol. 7 N°10 part II: 505-512 (1968).

Frey A.H. "Effects of microwaves and radio frequency energy on the central nervous system", presented at the Symp. on Biol. Effects and Health Implications of Microwave Radiation, Richmond, Va. Sept. 1969.

Frey A.H. "Cardiac and neural effects of R.F. energy" presented at the Int. Microwave Power Inst., The Hague, Netherlands. (Oct. 1970).

Frey A.H. Biological Function as Influenced by Low-Power Modulated RF Energy. IEEE Trans, on Microwave Theory and Techniques Vol. MTT 19 N° 2: 153-164 (Feb. 1971).

Gasser H.S. Nerve activity as modified by temperature changes. Amer. Jour. Physiol. 97:254-269 (1931).

Gordon Z.V., Kitsovskaya I.A., Tolgskaya M.S. and Letavet A.A. (Biological effects of microwaves of small intensity). Paper read at the International Conference on Medical Electronics; New York, (1961).

Gordon Z.V., Investigation of the blood pressure in rats under the influence of UHF. In A.A. Letavet and Z.V. Gordon (Eds.) Biological action of UHF. Moscow: Acad. Med. Sci. U.S.S.R.: 68-74 (OTS 62-19175 , R.816). (1962).

Gordon Z.V. The problem of the biological action of UHF. In A.A. Letavet and Z.V. Gordon (Eds.), The biological action of UHF, Moscow Acad. Med. Sci. U.S.S.R. P.2 (OTS62-19175, R.816) (1962).

Gordon Z.V., Lobanova Ye. A., Kitsovskaya, I.A., and Tolgskaya, M.S. Biological effects of microwave of low intensity. Med. Electro. Biol. Eng 1:67-69 (OTS 62-19175, R. 816) (1963).

Gordon Z.V. Biological Effect of Microwaves in occupational Hygiene. Israel Program for Scientific Translations, Jerusalem (1970).

Graham D. and D. McRuer. Analysis of non-linear control systems. John Wiley and Sons, Inc. N.Y. (1961).

Guttman R. Temperature Dependence of Oscillation in Squid Axons: Comparison of Experiments with Computations. Biophys. J. 9:269-276 (1969).

Helmholtz H. Messungen Uber den Zeitlichen Verlauf der Zuckung animalischer Muskeln und die Fortpflanzungschwindigkeit der Reizung in den Nerven. Arch. Anat. Physiol. Wissensch. Med.: 276-364 (1850).

Hodgkin A.L. and W.A.H. Rushton. The electrical constants of a crustacean nerve fiber. Proc. Roy. Soc. B 133:444-479 (1946).

Hodgkin A.L. and B. Katz. The effect of temperature on the electrical activity of the giant axon of the squid. J. Physiol. 109:240-249 (1949).

Hodgkin A.L. and A.F. Huxley. A quantitative description of membrane current and its applications to conduction and excitation in nerve. J. Physiol. 117: 500-544 (1952).

Houk, W.M. Human Responses to microwave irradiation: A review and evaluation of published Reports. (Rochester University, New York, Dep. of Radiation Biology and Biophysics) 22p. (Conf.720 542-1) Dep. NTIS from Aerospace Med. Association Meeting. Bal Harbour, Florida (May 8, 1972).

Hubbard S.J. The electrical constants and the component conductances of frog skeletal muscle after denervation. J. Physiol. 165:443-456 (1963).

Jenerick H. Phase Plane trajectories of the muscle spike potential. Biophys. J. 3:363-377 (1963).

Jenerick H. Analysis of the striated muscle fiber action current. Biophys. J. 4:77-91 (1964).

Johnson F.H., H. Eyring and M.J. Polissar. The kinetic basis of molecular biology, John Wiley & Sons, New York, (1954).

Johnson F.H., Ed. Influence of Temperature on Biological Systems.Amer. Physiological Society. Washington (1957).

Kamenskiy Y.U.I. The influence of microwaves on the functional conditions of the nerve. Biofizika 9:695-700 (ATD Report T-65-39, Library of Congress, Transl. (1964).

Kamenskiy Y.U.I. "Effect of Microwaves on the kinetics of electric parameters of a nerve impulse" Transl. Moscow Society of Naturalists 28:164-172 (1968).

Katz B. The electrical properties of the muscle fiber membrane. Proc. Roy. Soc. B 135:506-534 (1948).

Ling G. and R.W. Gerard. The normal membrane potential of frog Sartorius fibers. Jour. Cell. Comp. Physiol. 34:383-395 (1949).

Ling G. and R.W. Gerard. The membrane potential and metabolism of muscle fibers. Jour Cell & Comp. Physiol 34:413-438 (1949).

Ling G. and J. W. Woodbury. Effect of temperature on the membrane potential of frog muscle fibers. J. Cell & Comp. Physiol. 34:407-412 (1949).

Lobanova Ye. A. Survival and development of animals with various intensities and durations of the influence of UHF. In A.A. Letavet and Z. V. Gordon (eds.) Biological action of UHF. Moscow: Acad. Med. Sci. U.S.S.R.: 68-74 (OTS 62-19175 R.816) (1962).

Lobanova Ye. A. and Gordon Z.V. Investigation of the olfactory sensitivity in persons subject to UHF Fields. In A.A. Letavet and Z.V. Gordon (Eds.) Biological Action of UHF. Moscow: Acad. Med. Sci. U.S.S.R..: 50-56 (OTS 62-19175 R.816) (1962).

Lobanova Ye. A. and M.S. Tolgskaya. Change in the higer nervous activity and interneuron connections in the cerebral cortex of animals under the influence of UHF. In A.A. Letavet and Z.V. Gordon (Eds.), Biological action of UHF. Moscow: Acad. Med. Sci. U.S.S.R.: 68-74 (OTS 62-19175 R.816) (1962).

Lobanova E.A. anf A.V. Goncharova. Investigation of conditioned reflex activity in animals subjected to the effect of ultrashort and short radio-waves. Inst. Occupational hygiene, Acad. Med. U.S.S.R.; Medicine 1:29-33 (1971).

Lorente de No, R. A study of Nerve Physiology. Studies from the Rockefeller Institue for Medical Research. New York. Vols. 131 and 132 (1947).

Mac Farlane W.V. and J.D. Meares. Intracellular recording of action and after potentials of frog muscle between 0° and 45°C. J. Physiol. 142: 97-109 (1958).

Mc Affe R.D. "Neurophysiological effect of microwave irradiation". in Proc. 3rd. Annu. Tri-Service Conf. Biol. Hazards of Microwave Radiating Equipments, C. Susskind, Ed. (Univ. Calif. Berkeley, Aug. 25-27, 1959) : 314 (1959).

Mc Afee R.D. "Neurophysiological effect on 3-cm microwave radiation" Amer. J. Physiol. Vol. 200;192 (1961).

Mc Afee R.D. "Physiological effects of thermal and microwave stimulation of peripheral ". Amer. J. Physiol. Vol. 203:374 (1962).

Mc. Afee R.D. "Microwave stimulation of the sympathetic nervous system". Biomed. Sci. Instrum. Vol. 1 New York: Plenum Press 167 (1963).

Mc Afee R.D. "The neural and hormonal response to microwave stimulation of peripheral nerves" presented at the Symp. Biol. Eff. Health Implic. Microwav Radiat., Richmond, Va (Sept. 1969).

McLees B.D. and E.D. Finch. Analysis of Reported Physiologic Effects

of Microwave Radiation, in Advances in _Biological and Medical Physics, Vol. 14, Academic Press, New York - 163-223 (1973).

Michaelson S.M. The Tri-Service Program. A tribute to George M. Knauf, USAF (Mc) IEEE Transactions on Microwave Theory and Techniques, Vol. MTT 19, N°2:131-146 (Feb. 1971)

Milroy W.C. Neuroendocrine effects of microwave radiation (Rochester University, N. York, Dep. of Radiation Biology and Biophysics) pp. 13, 1971 Conf. 720542-2. Dep. NTIS from Aerospace Med. Assosc. Meeting; Bal Harbour, Fl. May 8, 19712.

Minorsky N. Introduction to non-linear mechanisms. Ann Arbor, J.W. Edwards, U.S.A. (1947).

Moore L.E., J.P. Holt and B.D. Lindley. Laser temperature-jump technique for relaxation studies of the ionic conductances in myelinated nerve fibers. Biophys. J. 12: 157-174 (1972).

Nastuk W.L. and A.L. Hodgkin. The electrical activity of single muscle fibers. Jour. Cell. Comp. Physiol. 35:39-73 (1950).

Plonsey R. and Fleming D.G. Bioelectric phenomena. McGraw Hill Book Co. N.Y. : 78-201 (1969).

Ponder, Eric. The coefficient of thermal conductivity of blood and of various tissues. J. Gen. Physiol. 45: 545-551 (1962).

Portela A., J.C. Pérez, M. Luchelli, P.A. Stewart, T. Hajduk, M.N. Parisi and A. Garrison. Potassium and Cesium Effects on Sodium Efflux and oxygen Consumption of Muscle Cells. Biochim. Biophys. Acta 109:495-502 (1965).

Portela A., J.G. Vaccari, R.J. Pérez, A. Ardizzone, J.C. Pérez. Electrical Membrane Constants of Sartorius Muscle Fibers from the South American Frog Leptodactilus ocellatus. Experientia 26:957 (1970).

Portela A., R.J. Pérez, J. Vaccari, J.C. Pérez and P. Stewart. Muscle Membrane Depolarization by Acetylcholine, Choline and Carbamylcholine, near and Remote from Motor End-Plates. J. Pharmacol. Exp. Ther. 175: 476-482 (1970 a).

Portela A., J. Vaccari, P. A. Stewart, R.J. Pérez and J.C. Pérez. Cesium Effects on Muscle Membrane Responses to Quaternary Ammonium ions. J. Pharmacol. Exp. Ther. 175:483-488 (1970 b).

Portela A., M. Garfunkel, J. G. Vaccari, A.M. Delbue, P.A. Stewart and J.C. Pérez. Radiation Effects on Water Permeability and Distribution in Frog Muscle Cells. Radiation Research 47:704-715 (1971).

Portela A., M. Brennan, J. Vaccari, J.C. Pérez and P. Stewart. Denervation Effects on Water Permeability and Distribution in Frog Skeletal Muscle Cells. Studia Biophysica, in press, August 1974.

Portela A., J. G. Vaccari, O. Llobera, M. Campi, M. Delbue and J.C. Pérez. X-Radiation Effects on Electrical Muscle Cell Parameters. Studia Biophysica, in press, September 1974.

Portela A., J. G. Vaccari, S.M. Michaelson, O. Llobera, M. Brennan, A. E. Gosztonyi, J. C. Pérez and J. Jenerick. Transient Effects of Low Level Microwave Irradiation on Bioelectric Muscle Cell Properties and on Water Permeability and Its Distribution - Studia Biophysica, in press, September 1974.

Portela A., H. Jenerick, J. C. Pérez, A.E. Gosztonyi and M. Brennan. The Effects of Temperature on Electrical Parameters of Muscle Cell. Submitted for publication in Studia Biophysica.

Pressman A.S. and N. A. Levitina. The nonthermal effect of microwaves on the systolic rhythm of animals. II The effect of pulsed microwaves. Byull. Eksp. Biol. Med. 52:39-43 (1962).

Pressman A.S. and N.A. Levitina. Nonthermal action of microwaves on the cardiac rhythm. Byull. Eksp. Biol. Med. 53:36-39 (1963).

Pressman A.S. Electromagnetic Fields and Life (Translated from Russian) New York-London:Plenum (1970).

Prosser C.L. editor. Physiological Adaptation. American Physiological Society, Washington, D.C. (1958).

Schwan H. P., E. Carstensen, Kam Li. Heating of Fat Muscle Layers by Electromagnetic and Ultrasonic Diathermy. AIEE Transactions: 1-6 September 1953.

Schwan H.P., G. Morris Piersol. The Absorption of Electromagnetic Energy in body Tissues. American Jour. of Physical Med. Vol. 33,N° 6: 371-404 (Dec. 1954).

Schwan H. P. and Kam Li. The Mechanism of Absorption of Ultrahigh Frequency Electromagnetic energy in Tissues, as Related to the Problem of Tolerance Dosage. Presented at the Symposium on the Physiologic and Pathologic Effects of Microwaves held at the Mayo Clinic, Rochester, Minnesota on Sep. 23, 1955.

Schwan H. P. Survey of Microwave Absorption Characteristics of Body Tissues. Lecture presented at the Second Tri-Service conference on Biological Effects of Microwave Energy, July 8-10 (1958).

Schwan H.P. Characteristics of absorption and energy transfer of microwaves and ultrasounds in tissues, in Medical Physics, Vol. 3 Chicago, III.: Yearbook Medical Publishers, : 1-7 (1960).

Schwan H.P., A, Anne, M. Saito and O.M. Salati. "Relative microwave absorption cross sections of biological significance" in Bioligical Effects of Microwave Radiation, Vol. 1, New York, Plenum Press: 153-176 (1961).

Schwan H.P. and L. D. Sher. Alternating-Current Field-Induced Forces and their Biological Implications. Jour. of the Electrochemical Soc. Vol. 116-N°1: 22-26 (January 1969).

Schwan H. P. Interaction of microwave and Radio Frequency Radiation with

Biological Systems, IEEE Transactions on microwave Theory and Techniques Vol. MTT-19: 146-152 (Feb. 1971).

Schwan H. P. Microwave Radiation: Biophysical Considerations and Standards Criteria. IEE Trans. Bio-Med. Eng. Vol. BME-19, N°4:304-312(July 1972).

Schwan H.P., Fellow, IEEE Microwave Radiation: Biophysical Considerations and Standards Criteria. IEEE Trans. on Biomedical Eng.: 304-312 (July 1972).

Shitzer A. Addendum to "A Review on Mathematical Models of the Human Thermal System. IEEE Trans. Bio-Med. Eng. Vol. BME-20, N°1:65-66 (January 1973).

Tamashige M. Membrane and sarcoplasm resistance in an isolated frog muscle fiber. Annotationes Zool. Japan 23:125-130 (1950).

Tasaki J. The excitatory and recovery process in the nerve fiber as modified by temperature changes. Biochim. et biophys. acta, 3:498-509 (1949).

Tasaki I. and S. Hagiwara, Capacity of muscle membrane. Am. J. Physiol 188:423-429 (1957).

Tasaki I. and C.S. Spyropoulos. Influence of changes in temperature and pressure on the nerve fiber. Influence of temperature on Biological Systems, edl. by F.H. Johnson. American Physiological Society:201-220. Washington, D.C. (1957).

Thesleff S. The mode of neuromuscular block caused by acetylochline,nicotine, decamethonium and succinylcholine. Acta Physiol. Scand., 34:218-231 (1955).

Thörner W. Untersuchungen über Wärmeerregung und Warmelahmung und den Erscheinungskomplex der "Gewöhnung" bei der letzteren. Zeitschr. allgem. Physiol. 18:226-276 (1920).

Vernberg W.B. and F.J. Vernberg. Environmental Physiology of Marine Animals. Springer-Verlag New York Inc. (1972).

TABLE I

Composition of Bathing Solutions

Solution	NaCL	KCL	$CaCL_2$	Na_2HPO_4	NaH_2PO_4	Osmolarity
	mM/I	mM/I	mM/I	mM/1	mM/1	mOsm/1
Normal Ringer	111.2	2.5	1.89	2.5	0.5	222
Test Ringer	59.3	2.5	1.89	2.5	0.5	111

TABLE II Passive Membrane Electrical Parameters

Parameters Symbols and Units		Control (C)	Irradiated (I)		Difference (I-C)/C, in %		"t" test significance Level	
			Winter	Summer	Winter	Summer	Winter	Summer
V_r	mV	-87	-87	-87	0	0	none	none
2a	μ	78.6	75.1	76.6	-4.4	-2.5	.001	.05
λ	mm	1.18	1.06	1.12	-10	-5	.001	.001
ϕ	KΩ	304	299	304	-1.6	0	none	none
R_m	K cm^2	1.77	1.49	1.64	-16	-7.3	.001	.001
G_m	mmho/cm^2	0.56	0.67	0.61	19.6	9	.001	.001
C_m	μF/cm^2	7.6	8.6	8.13	13	7	.001	.001
$\mathcal{T}_m$	msec	13.5	13	13.3	-3.7	-1.4	.001	none

In the last two columns are listed the calculated level of t-test significance of each difference.

TABLE III Potential Parameters from Phase Plane Trajectories and Conduction Velocity

Parameters Symbols and Units		Control (C)	Irradiated (I)		Difference (I-C)/C, in %		"t" test Significance Level	
			Winter	Summer	Winter	Summer	Winter	Summer
V_r	m V	-87	-87	-87	0	0	none	none
V_{os}	m V	27	34	30	26	11	.001	.001
V_{Na}	m V	32	39	35,5	22	11	.001	.001
V_{on}	m V	-73	-72	-73	-1.3	0	.1	none
V_s	m V	114	121	118	6	3.5	.001	.01
V_n	m V	14	15	14	7	0	.1	none
θ	m/sec	2	2.21	2.11	10.5	5.5	.001	.001

From values V_r to V_{on} : Membrane Potential from Zero Voltage Reference

V_s V_n : " " " Resting Membrane Potential

TABLE IV Parameters of the Action Current Associated with the Propagated Action Potential

Parameters Symbols and Units		Control (C)	Irradiated (I)		Difference (I-C)/, in %		"t" test significance Level	
			Winter	Summer	Winter	Summer	Winter	Summer
V^*	mV	-53	-53	-53.1	0	0	none	none
V_i	mV	-25.5	-23	-24.1	-10	5.4	.02	.02
$\dot{V}+$	V/sec	537	594	557	10.6	4	.001	.02
$\dot{V}_j$	mV	-6.5	-2	-5.6	-69	-14	.001	.001
$\dot{V}-$	V/sec	140	134	136	-4	-2.8	.05	.05
I_i	ma/cm^2	-5.4	-6.6	-5.9	22	9	.001	.001
I_o	ma/cm^2	1.09	1.18	1.13	8	3.6	.001	.02
q_i	C/cm^2	0.888	0.982	0.932	10.5	5	.o5	.05
q_o	C/cm^2	0.646	0.897	0.700	38	8.3	.001	.001
Δq	C/cm^2	0.242	0.085	0.232	-64	-4	-	-

TABLE V Slope Parameters and Limiting Conductances

Parameters Symbols and Units		Control (C)	Irradiated (I)		Difference (-C)/C, in %		"t" test Significance Level	
			Winter	Summer	Winter	Summer	Winter	Summer
k_r	$msec^{-1}$	11.8	13	12.2	10	3.4	.001	.02
k_{Na}	$msec^{-1}$	15.7	15.8	15.6	0.6	-0.6	none	none
k_K	$msec^{-1}$	2.6	3.1	2.8	19	7.7	.001	.001
$-g_{Na}$	$mmho/cm^2$	-140	-172	-150.4	23	7	.001	.01
g_{Na}	$mmho/cm^2$	265	301	289	13	9	.001	.001
g_K	$mmho/cm^2$	25	33	28	32	12	.001	.001

TABLE VI Cell Water Parameters

Parameters Symbols and Units		Winter (W)			Summer (S)			Control Difference
		C	I	Difference (I-C)/C, in %	C	I	Difference (I-C)/C, in %	(S-W)/W, in %
V_c/V_{co}	-	1.52	1.67	10	1.70	1.76	3.5	12
W_{eff}	-	0.52	0.67	29	0.70	0.76	8.6	34.6
P_w	cm^4/osmole-sec	0.42	0.52	24	0.55	0.61	11	31
Number of muscle cells measured			60			80		

TABLE VII Temperature Dependence of Electrical Membrane Parameters and Cell Water Parameters

Temperature	k_r	g_{Na}	g_k	$\hat{V}+$	$\hat{V}-$	P_w Winter	P_w Summer
^oC	$msec^{-1}$	$mmho/cm^2$	$mmho/cm^2$	V/sec	V/sec	$cm^4/osm.sec$	$cm^4/osm.sec$
20	7.8	183	17.1	380	100	0.32	0.45
24	10.8	245	23	500	132	-	-
25	11.8	260	25	540	140	0.42	0.55
26	12.7	280	26.5	580	151	-	-
30	17.7	375	35.5	760	200	0.52	0.63
Q_{10}	2.27	2.05	2.07	2.0	2.0	1.63	1.4-1.5
$E \frac{K\ cal}{mol.}$	14.5	12.7	12.9	12.2	12.2	9.7	6.73

Equipment List and Abbreviations For Figure 3

A.G.	Sine wave generator
AT	10:1 Attenuator
CAL	Calibration unit
CAMERA	Photografic camera
C.E.	Electrometer
COM	Compensator
C.R.O.	Oscilloscope
DIF	Operational amplifier
E.I.	External input
G.C.	Gain control on V.A.
H	External sweep input
HD	Horizontal display switch on CRO
I.U.	Stimulus isolation unit
L.B.	A and B inputs to lower beam
M.E.	Micropipette electrodes and micromanipulators
M.S.	Master switch
P.B.	Shutter control push button
P.G.	Pulse generator
R	Resistors (1%)
RLY	A and B relays
S.D.	Silicon diode
S.W.	Switch for by-passing the 40K resistor
STIM	Stimulator
T.M.	Time mark generator
UB	A and B inputs to upper beam
V.A.	5x voltage amplifier
V.E.	Electrometer
Va	Output voltage from relays
W.G.	Waveform generator (sawtooth)

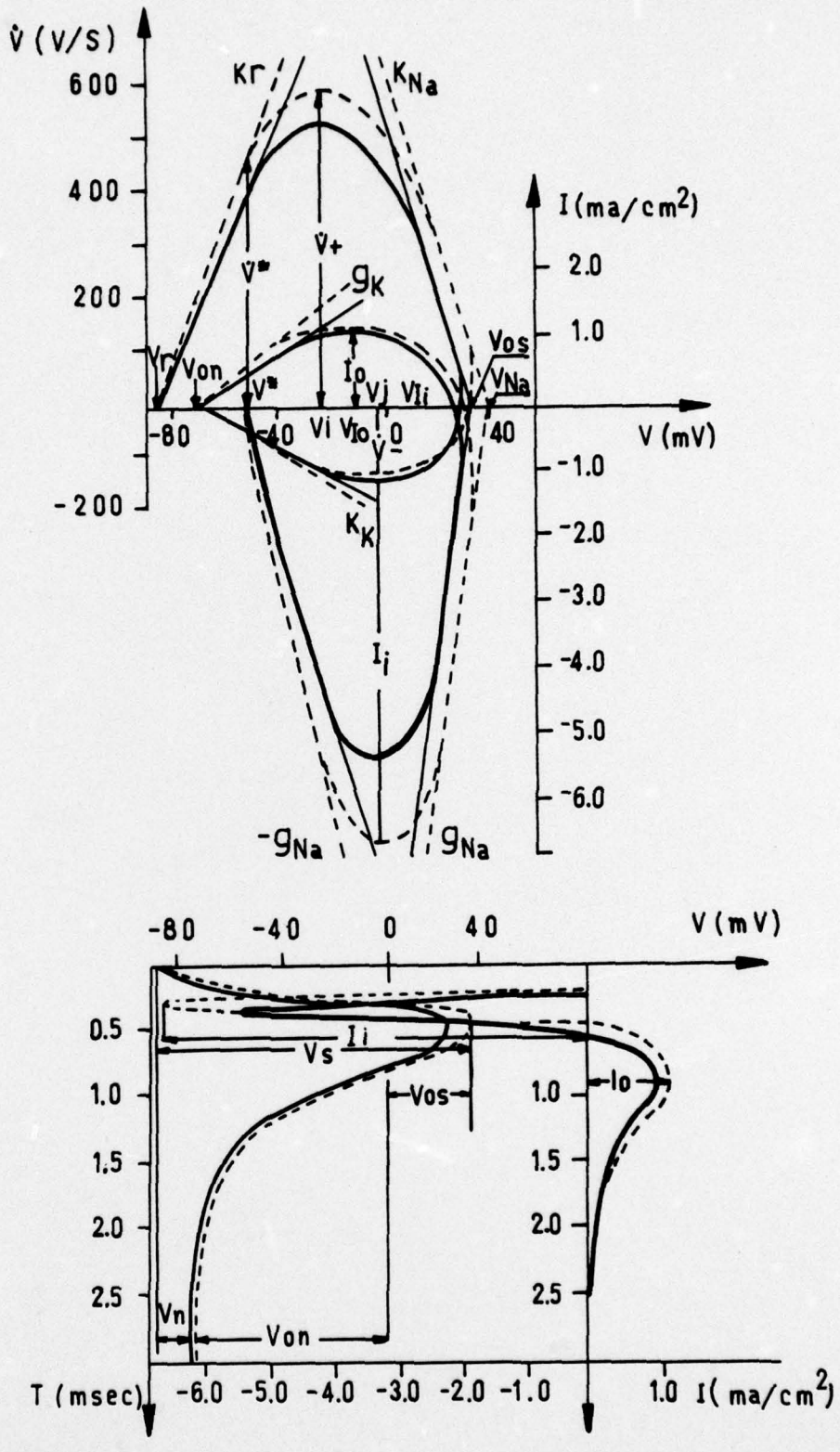

V̇ (V/S)
600
400
200
-200
Kr
KNa
V̇+
V̇*
gK
Vr
Von
V*
Io
Vj
VIi
Vos
VNa
-80
-40
Vi
VIo
0
40
V (mV)
V̇-
KK
Ii
-gNa
gNa
I (ma/cm2)
2.0
1.0
-1.0
-2.0
-3.0
-4.0
-5.0
-6.0
-80
-40
0
40
V (mV)
0.5
1.0
1.5
2.0
2.5
Ii
Vs
Vos
Io
Vn
Von
T (msec)
-6.0
-5.0
-4.0
-3.0
-2.0
-1.0
1.0
I (ma/cm2)

FIG.1

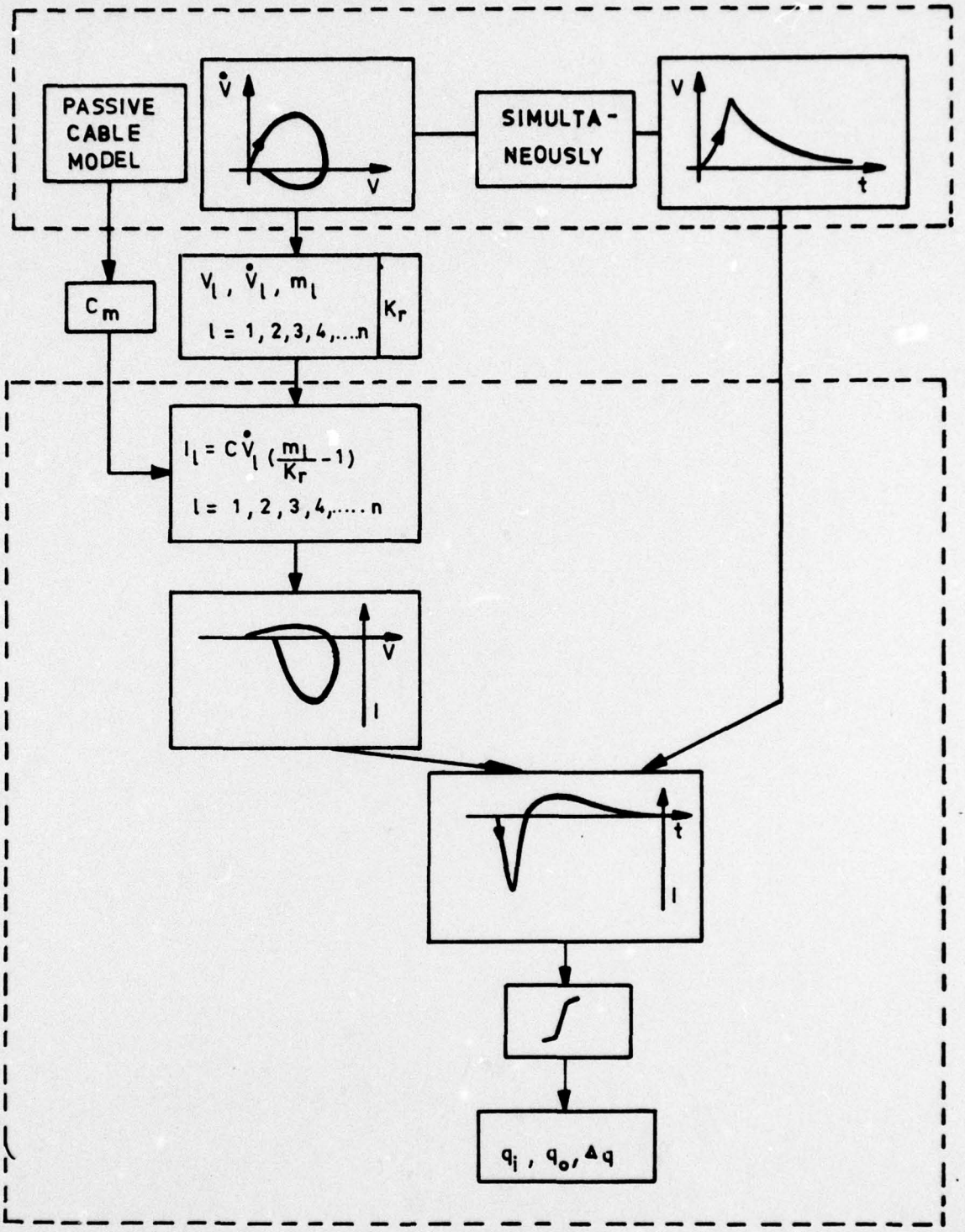
PASSIVE CABLE MODEL
$\dot{V}$
V
SIMULTA-NEOUSLY
V
t
C_m
V_l , $\dot{V}_l$, m_l
l = 1, 2, 3, 4, ...n
K_r
$I_l = C\dot{V}_l (\frac{m_l}{K_r} - 1)$
l = 1, 2, 3, 4, ... n
V
l
t
l
q_i , q_o, Δq

FIG. 2

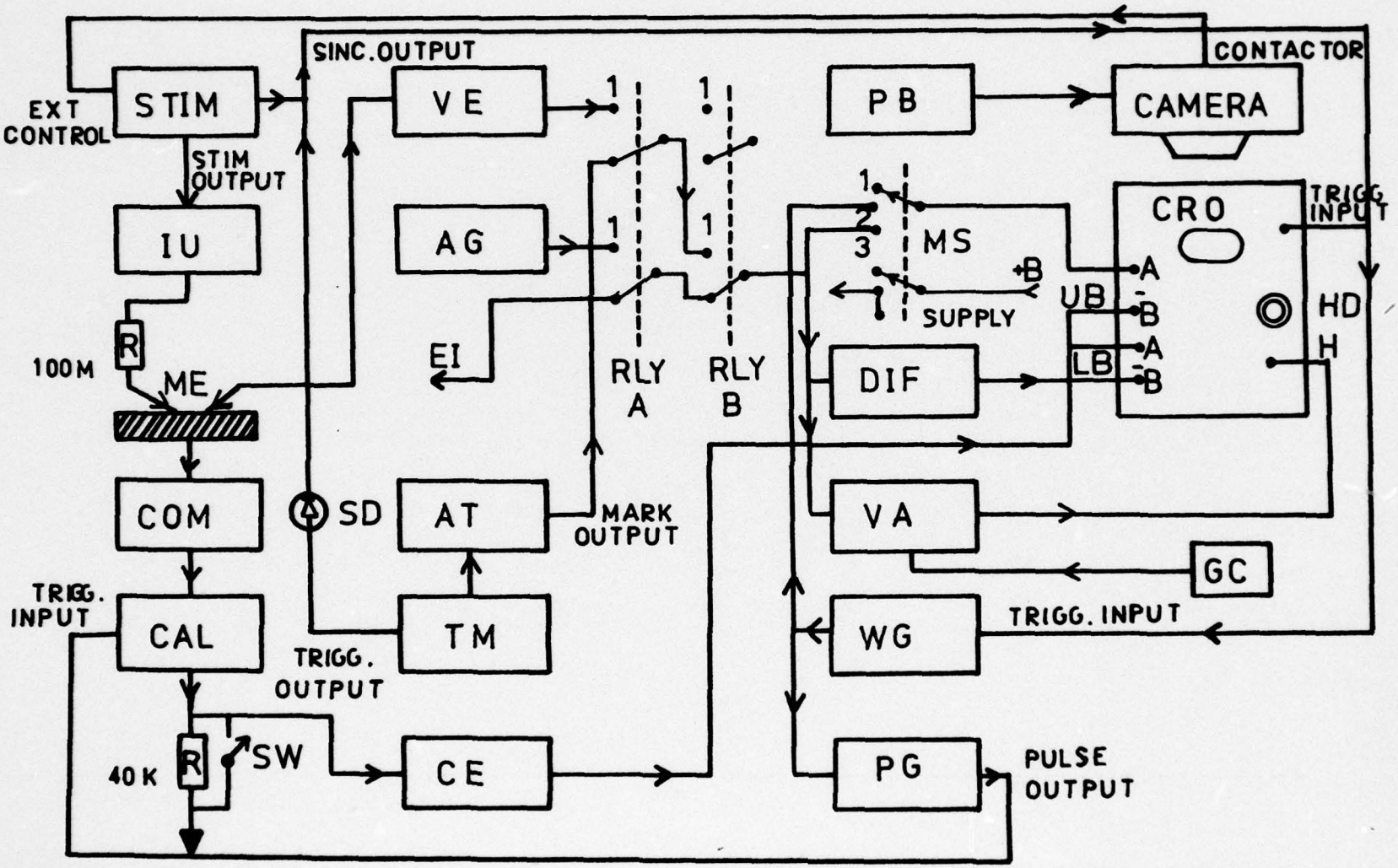
EXT CONTROL
STIM
STIM OUTPUT
IU
R
100M
ME
COM
TRIGG. INPUT
CAL
40K
R
SW
SINC.OUTPUT
SD
TRIGG. OUTPUT
VE
AG
EI
AT
TM
CE
MARK OUTPUT
RLY A
RLY B
PB
CAMERA
CONTACTOR
MS
SUPPLY
+B
DIF
UB
LB
CRO
TRIGG INPUT
HD
H
VA
GC
WG
TRIGG. INPUT
PG
PULSE OUTPUT

FIG.3

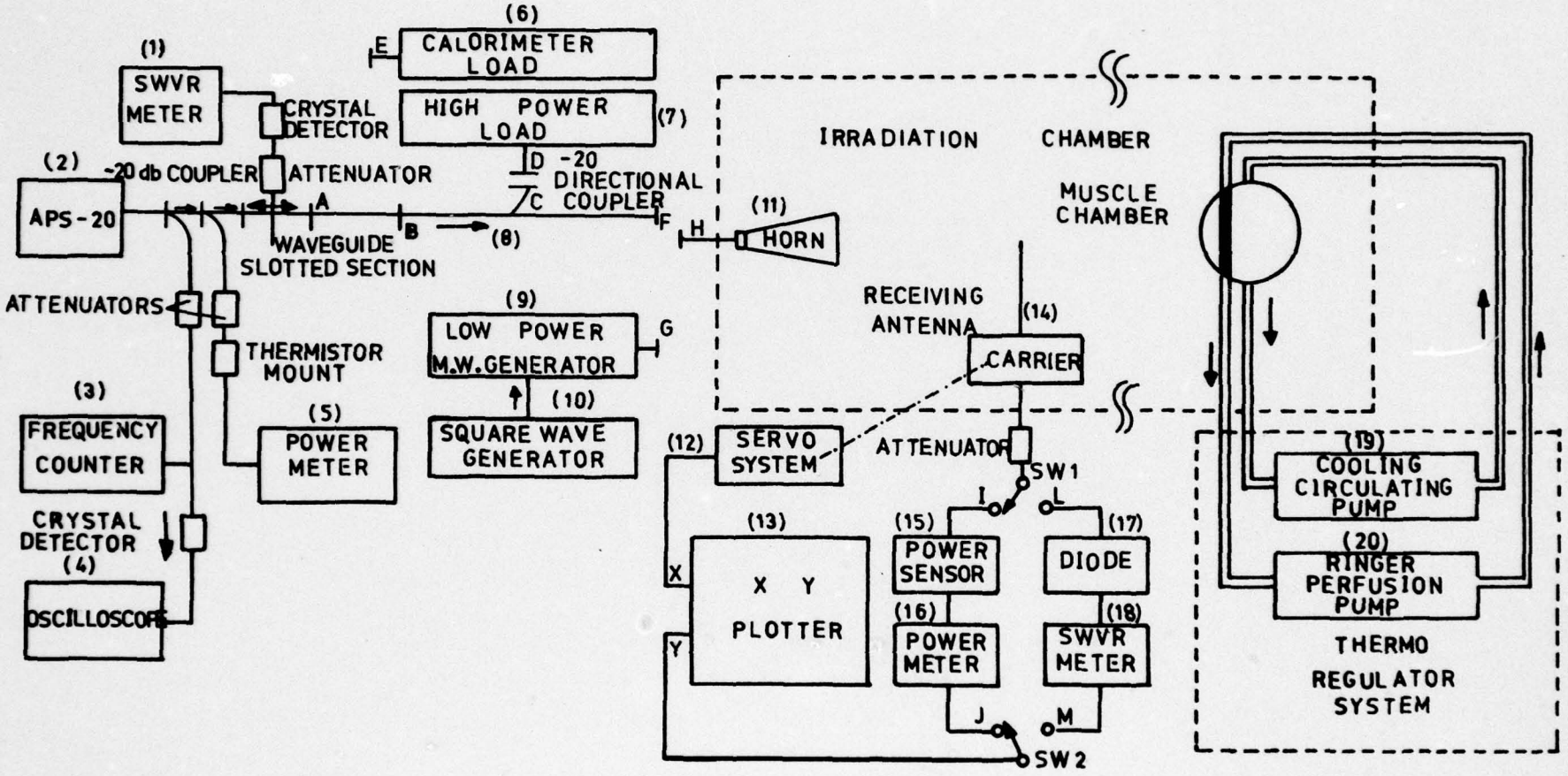
(1)
SWVR METER
CRYSTAL DETECTOR
(6)
E
CALORIMETER LOAD
HIGH POWER LOAD
(7)
(2)
-20 db COUPLER
ATTENUATOR
D -20 DIRECTIONAL COUPLER
C
APS-20
A
B
(8)
F
H
WAVEGUIDE SLOTTED SECTION
(11)
HORN
IRRADIATION CHAMBER
MUSCLE CHAMBER
ATTENUATORS
(9)
LOW POWER M.W.GENERATOR
G
RECEIVING ANTENNA
(14)
CARRIER
THERMISTOR MOUNT
(3)
FREQUENCY COUNTER
(5)
POWER METER
(10)
SQUARE WAVE GENERATOR
(12)
SERVO SYSTEM
ATTENUATOR
SW1
I
L
(19)
COOLING CIRCULATING PUMP
CRYSTAL DETECTOR
(4)
OSCILLOSCOPE
(13)
X Y PLOTTER
X
Y
(15)
POWER SENSOR
(16)
POWER METER
(17)
DIODE
(18)
SWVR METER
(20)
RINGER PERFUSION PUMP
THERMO REGULATOR SYSTEM
J
M
SW2

FIG.4

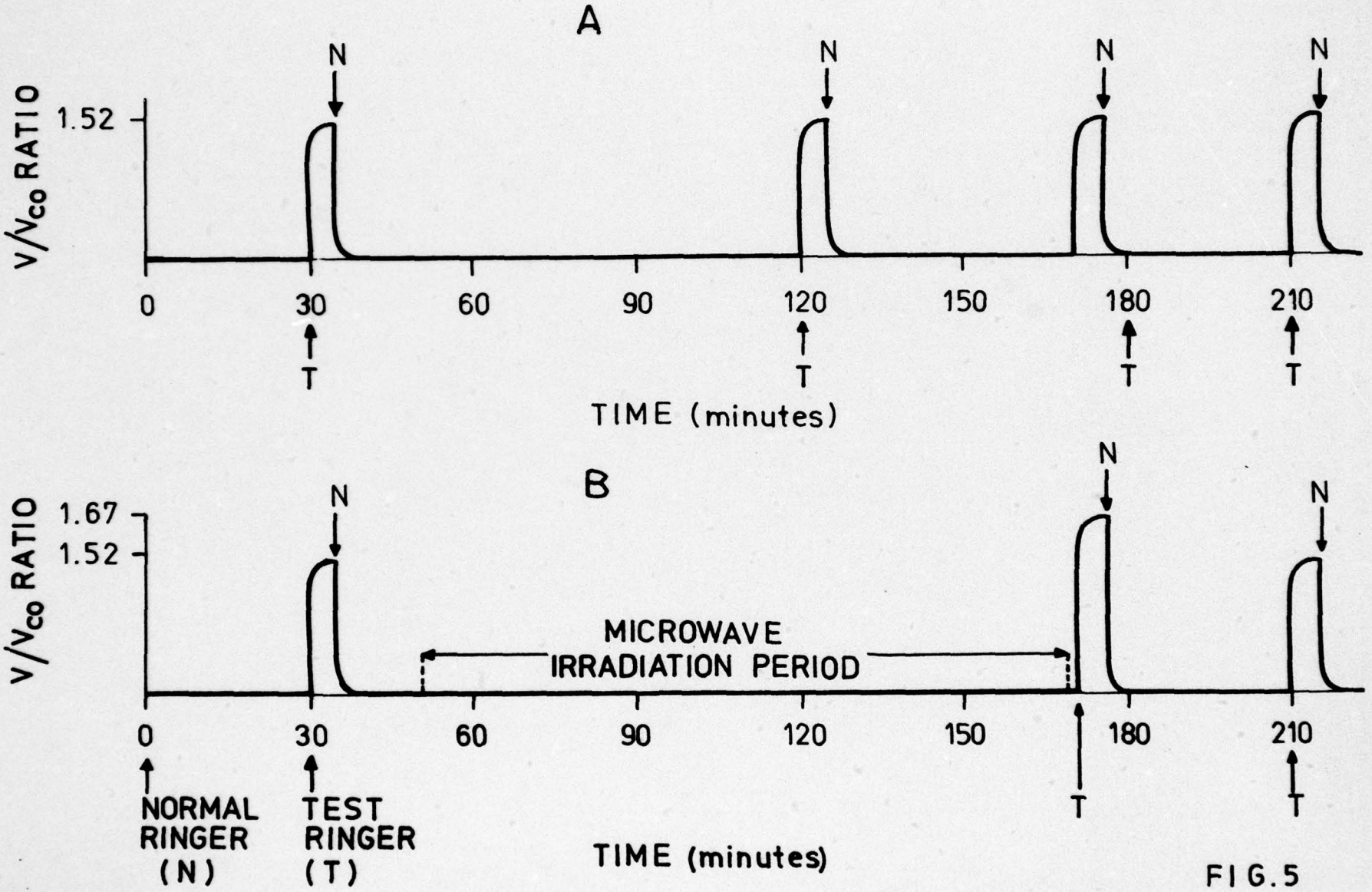
A
N
N
N
N
1.52
V/Vco RATIO
0
30
60
90
120
150
180
210
T
T
T
T
TIME (minutes)
B
N
N
N
1.67
1.52
V/Vco RATIO
MICROWAVE
IRRADIATION PERIOD
0
30
60
90
120
150
180
210
T
T
NORMAL
RINGER
(N)
TEST
RINGER
(T)
TIME (minutes)

FIG.5

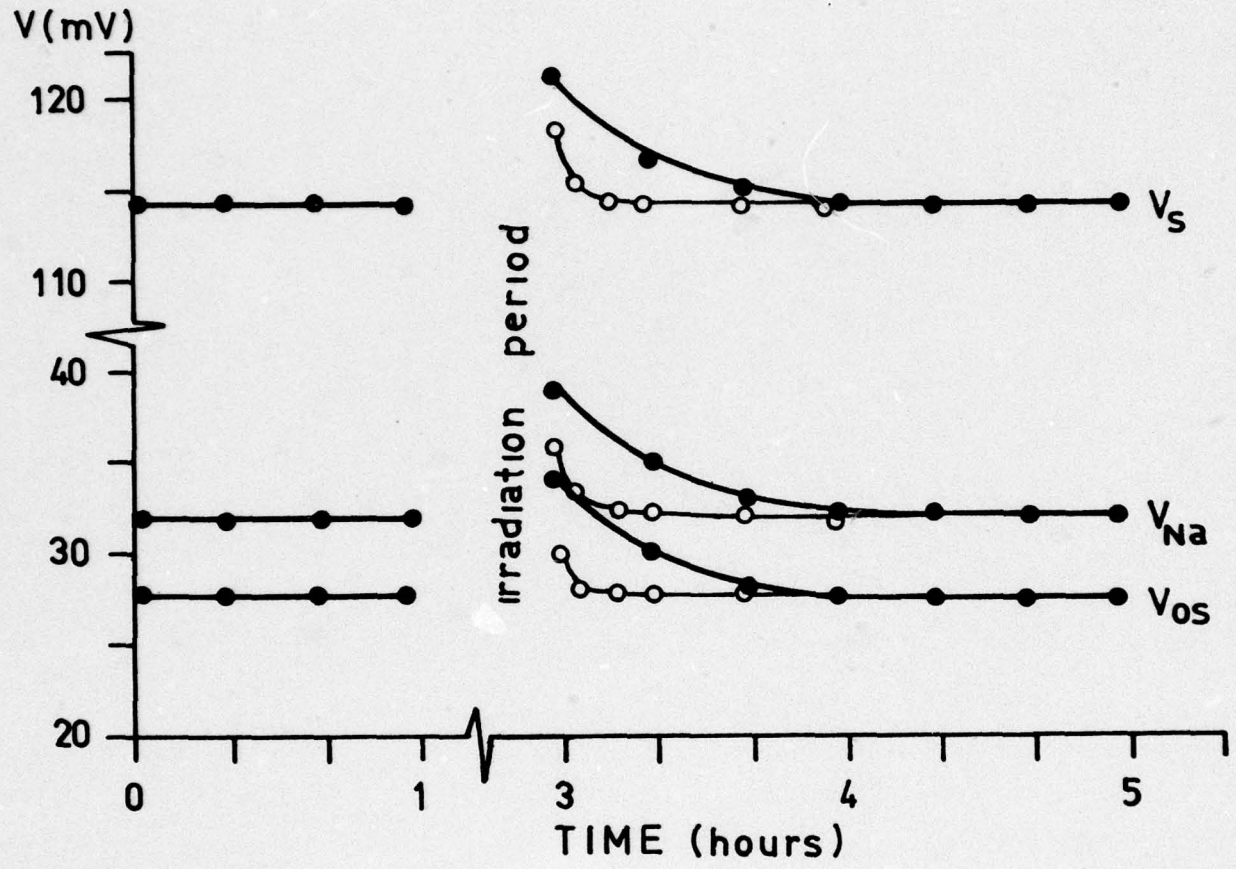
V(mV)
120
110
40
30
20
0
1
3
4
5
TIME (hours)
irradiation period
V_S
V_{Na}
V_{OS}

FIG.6

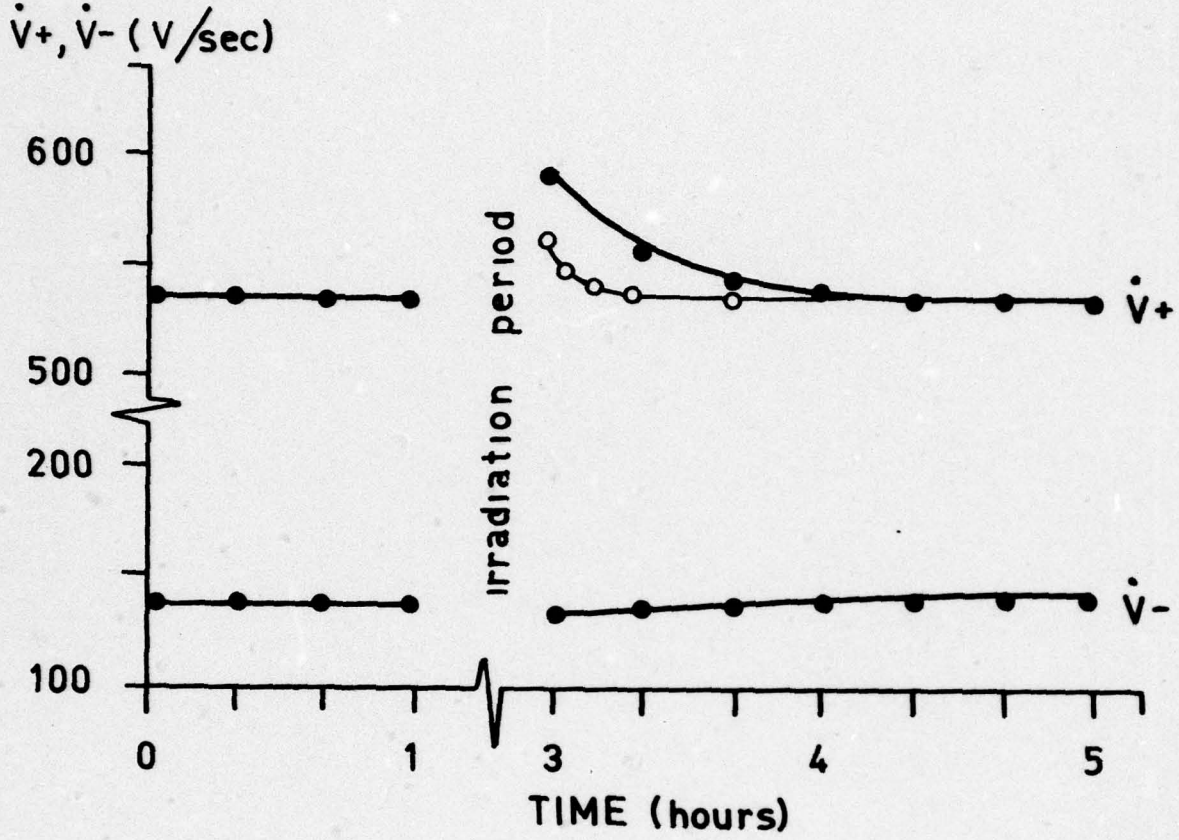
V̇+, V̇- (V/sec)
600
500
200
100
0
1
3
4
5
TIME (hours)
irradiation period
V̇+
V̇-

FIG. 7

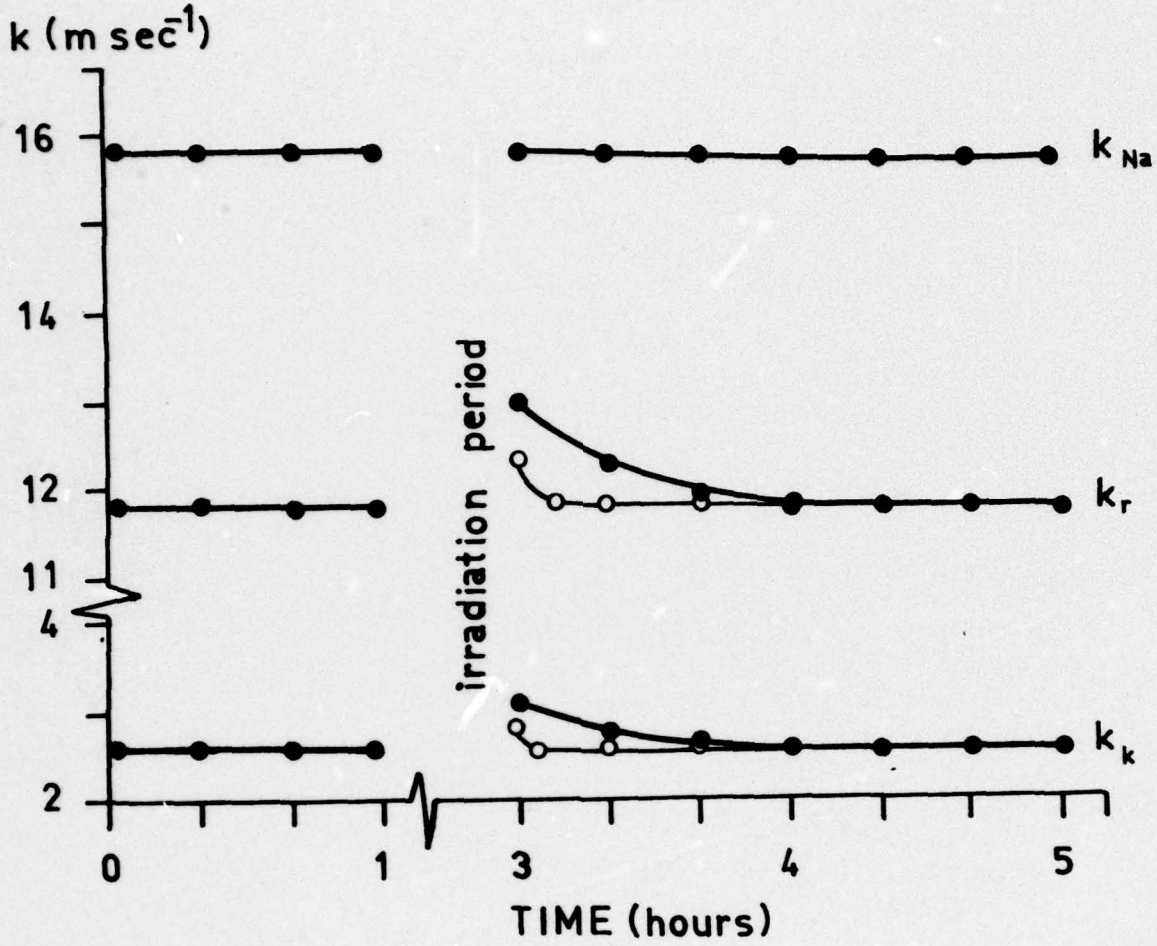
k (m sec⁻¹)
16
14
12
11
4
2
0
1
3
4
5
TIME (hours)
irradiation period
k_{Na}
k_r
k_k

FIG. 8

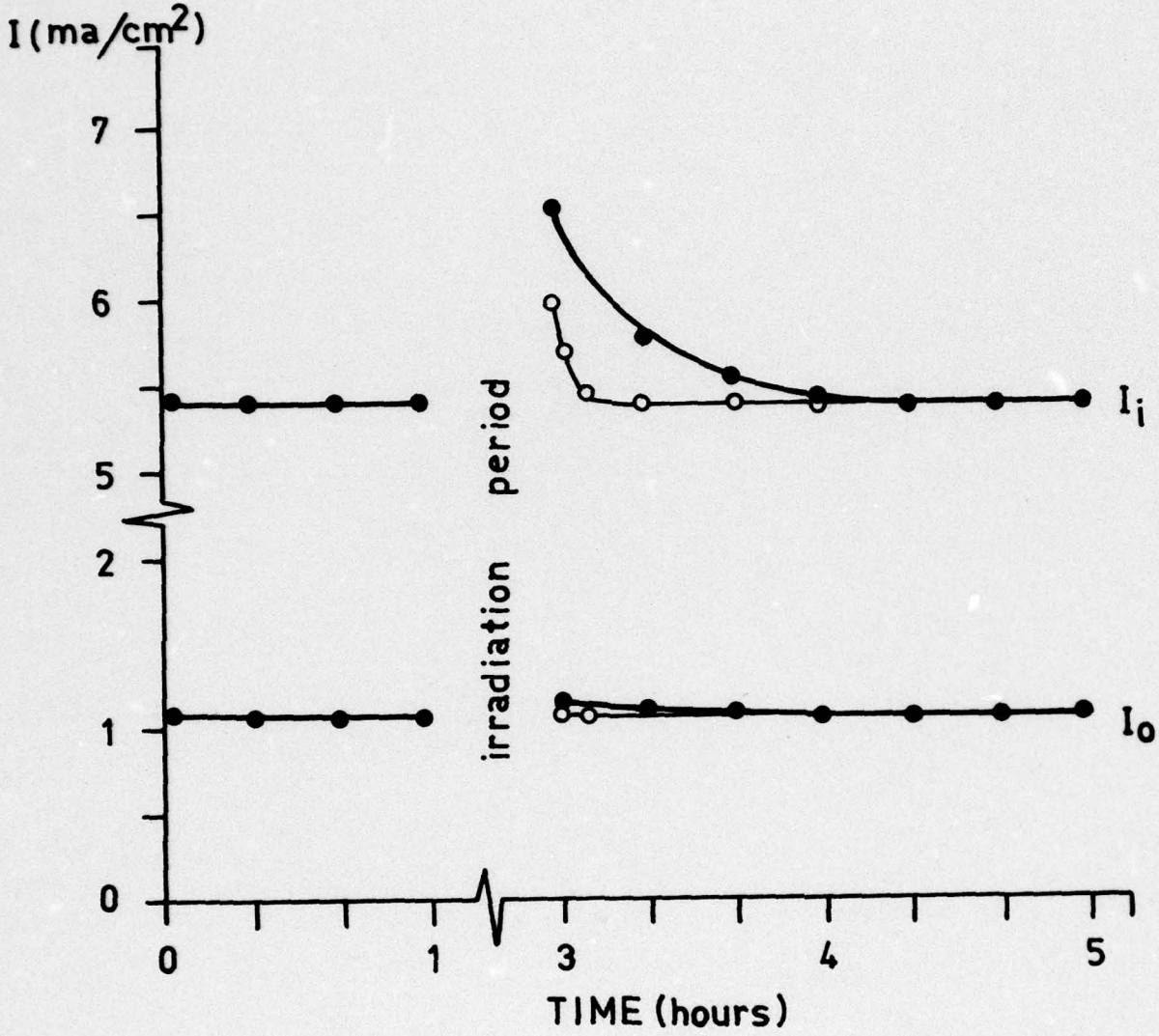

FIG. 9

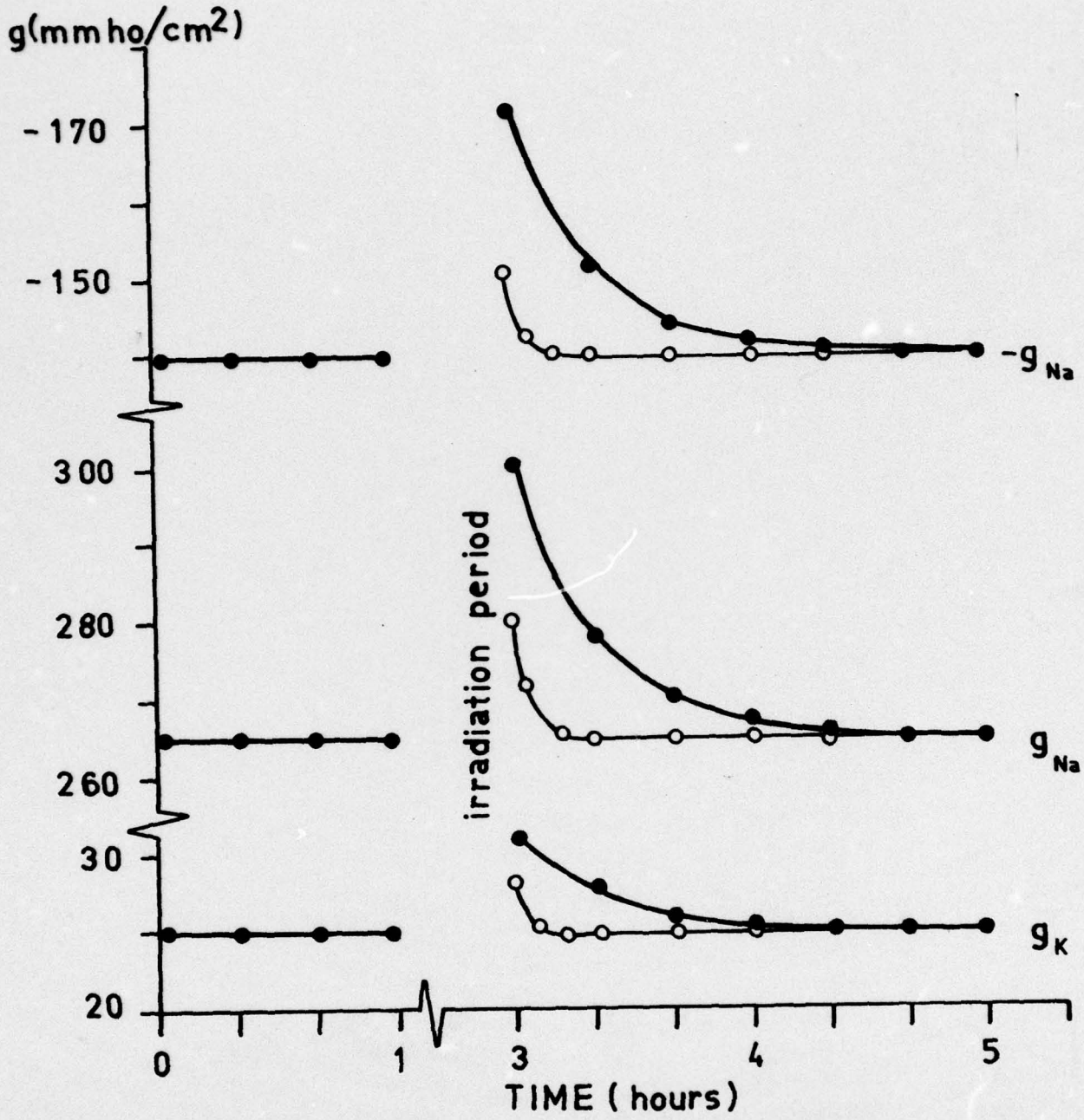
g(mmho/cm2)
-170
-150
300
280
260
30
20
0
1
3
4
5
TIME (hours)
irradiation period
-gNa
gNa
gK

FIG. 10